NIDEC MOTOR CORPORATION
8050 WEST FLORISSANT AVE.
ST. LOUIS, MO 63136

DATE: 2/11/2015

P.O. NO.: DE09
Order/Line NO.: 20838 MN 100

TO:

Model Number: DE09
Catalog Number: 8P20P1C
841 Plus Configuration
CONF,MOTOR,841 PLUS

REVISIONS:
(NONE)

ALL DOCUMENTS HEREIN ARE CONSIDERED CERTIFIED BY NIDEC MOTOR CORPORATION.
THANK YOU FOR YOUR ORDER AND THE OPPORTUNITY TO SERVE YOU.

Features:

```
Horsepower ..............  00020.00 ~ KW: 14.92
Enclosure ...............  TEFC
Poles ...................  02 ~ RPM: 3600
Frame Size ..............  256~T
Phase/Frequency/Voltage..  3~060~460 ~ Random Wound
Service Factor ..........  1.15
Insulation Class ........  Class "F" ~ Insulife 2000
Altitude In Feet (Max) ..  3300 Ft.(1000 M)
Ambient In Degree C (Max)  +40 C
Assembly Position .......  "F-1" Assembly Position
Efficiency Class ........  Premium Efficiency
Application .............  Unknown
Customer Part Number ....
"AK" Dimension (Inches)..  NA
Temperature Rise (Sine Wave): "B" Rise @ 1.0 SF (Resist)
Starting Method .........  Direct-On-Line Start
Duty Cycle ..............  Continuous Duty
Efficiency Value ........  90.2 % ~ NEMA Nominal
Load Inertia (lb-ft2): NEMA ~ NEMA Inertia: 20.90 ~ 1.00
Number Of Starts Per Hour: NEMA
Motor Type Code .........  CE
Rotor Inertia (LB-FT²)        1.46 LB-FT²
Qty. of Bearings PE (Shaft)   1
Qty. of Bearings SE (OPP)     1
Bearing Number PE (Shaft)     45BC03J3
Bearing Number SE (OPP)       45BC03J3
```

Nidec trademarks followed by the ® symbol are registered with the U.S. Patent and Trademark Office.

NIDEC MOTOR CORPORATION
8050 WEST FLORISSANT AVE.
ST. LOUIS, MO 63136

DATE: 2/11/2015

P.O. NO.: DE09
Order/Line NO.: 20838 MN 100

TO:

Model Number: DE09
Catalog Number: 8P20P1C
841 Plus Configuration
CONF,MOTOR,841 PLUS

REVISIONS:
(NONE)

ALL DOCUMENTS HEREIN ARE CONSIDERED CERTIFIED BY NIDEC MOTOR CORPORATION.
THANK YOU FOR YOUR ORDER AND THE OPPORTUNITY TO SERVE YOU.

Accessories:
Corro-Duty
Ground Lug In Conduit Box
Precision Balance
Standard Leadtime: REFER TO OFFICE
Est. Weight (lbs ea): 340 ~ F.O.B.: St. Louis, MO

USE THE DATA PROVIDED BELOW TO SELECT THE APPROPRIATE DIMENSION PRINT

Horsepower	20
Pole(s)	02
Voltage(s)	460
Frame Size	256T
Shaft U Diameter	1.625
Outlet Box AF	2.63
Outlet Box AA	1.50

Nidec trademarks followed by the ® symbol are registered with the U.S. Patent and Trademark Office.

EFFECTIVE: 28-FEB-11	HORIZONTAL MOTORS	PRINT: 07-2838
SUPERSEDES: 22-MAY-09	FRAME: 254, 256T BASIC TYPE: TC,CE	SHEET: 1 OF 1

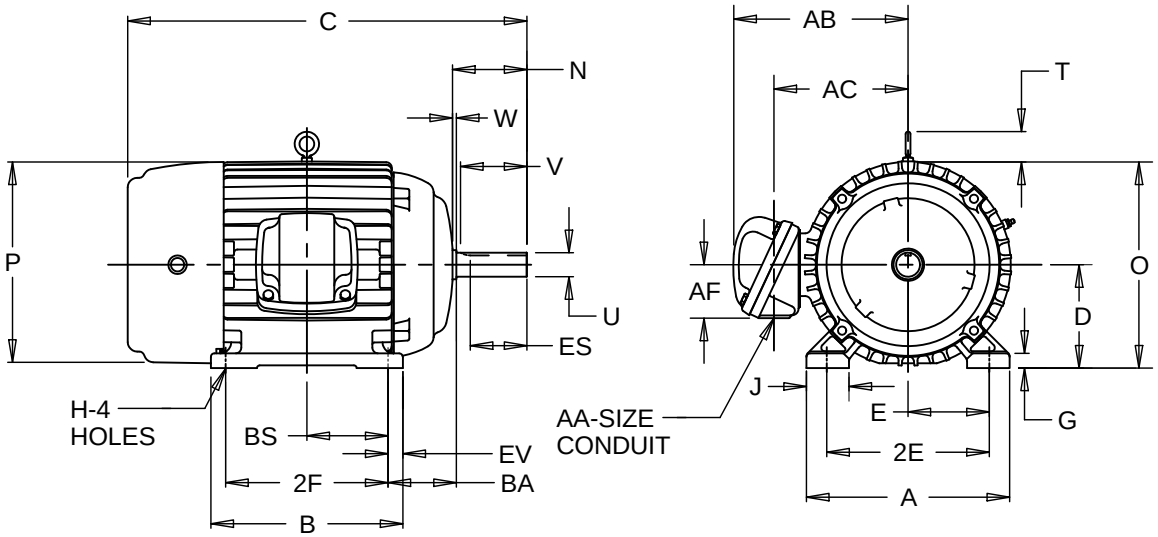

ALL DIMENSIONS ARE IN INCHES AND MILLIMETERS

	UNITS	A	B	C	D -.06	E	2E ±.03	G	H +.05	J	N
	IN	12.13	12.00	25.00	6.25	5.00	10.00	.88	.53	2.25	4.38
	MM	308	305	635	159	127	254	22	14	57	111

	UNITS	O	P [2]	T	U -.001	V MIN	W	AA	AB	AC	AF	BA
	IN	12.91	13.31	2.03	1.625	3.75	.38	1.50 NPT	11.56	8.56	2.63	4.25
	MM	328	338	52	41.28	95	10		294	217	67	108

	UNITS	BS	ES MIN	EV	SQ KEY
	IN	5.00	2.91	1.00	.375
	MM	127	74	25	10

	FRAME	UNITS	2F ±.03
	254T	IN	8.25
		MM	210
	256T	IN	10.00
		MM	254

1: ALL ROUGH CASTING DIMENSIONS MAY VARY BY .25" DUE TO CASTING AND/OR FABRICATION VARIATIONS.
2: LARGEST MOTOR WIDTH.
3: TOLERANCES SHOWN ARE IN INCHES ONLY.

4: STANDARD ASSEMBLY POSITION F-1 IS SHOWN F-2 IS PROVIDED WHEN SPECIFIED. CONDUIT OPENINGS MAY BE LOCATED IN STEPS OF 90 DEGREES REGARDLESS OF LOCATION. STANDARD AS SHOWN WITH CONDUIT OPENING DOWN.

ECO 46368-00

ISSUED BY L. CUESTA

APPROVED BY G. MATA

Nidec Motor Corporation
St. Louis, Missouri

INFORMATION DISCLOSED ON THIS DOCUMENT IS CONSIDERED PROPRIETARY AND SHALL NOT BE REPRODUCED OR DISCLOSED WITHOUT WRITTEN CONSENT OF NIDEC MOTOR CORPORATION

IHP_DP_NMCA (MAR-2011) SOLIDEDGE

NAMEPLATE DATA

CATALOG NUMBER:	8P20P1C			NAMEPLATE PART #:	422696-002		
MODEL	DE09	FR	256T	TYPE	CE	ENCL	TEFC
SHAFT END BRG	45BC03J3 - QTY 1			OPP END BRG	45BC03J3 - QTY 1		
PH	3	MAX AMB	40 C	ID#			
INSUL CLASS	F	Asm. Pos.	F1	DUTY	CONT		

HP	20	RPM	3530	HP		RPM	
VOLTS	460			VOLTS			
FL AMPS	23.1			FL AMPS			
SF AMPS	27.0			SF AMPS			
SF	1.15	DESIGN	B	CODE	G	SF / DESIGN / CODE	
NEMA NOM EFFICIENCY	91.0	NOM PF	88.9	KiloWatt	14.9	NEMA NOM EFFICIENCY / NOM PF	
GUARANTEED EFFICIENCY	89.5	MAX KVAR	3.3	HZ	60	GUARANTEED EFFICIENCY / MAX KVAR / HZ	

HAZARDOUS LOCATION DATA (IF APPLICABLE):

DIVISION		CLASS I	GROUP I
TEMP CODE		CLASS II	GROUP II

VFD DATA (IF APPLICABLE):

VOLTS			
AMPS			
TORQUE 1		TORQUE 2	
VFD LOAD TYPE 1		VFD LOAD TYPE 2	
VFD HERTZ RANGE 1		VFD HERTZ RANGE 2	
VFD SPEED RANGE 1		VFD SPEED RANGE 2	
SERVICE FACTOR		FL SLIP	
NO. POLES	2	MAGNETIZING AMPS	4.8
VECTOR MAX RPM		Encoder PPR	
Radians / Seconds	1	Encoder Volts	

TEAO DATA (IF APPLICABLE):

HP (AIR OVER)		HP (AIR OVER M/S)		RPM (AIR OVER)		RPM (AIR OVER M/S)	
FPM AIR VELOCITY		FPM AIR VELOCITY M/S		FPM AIR VELOCITY SEC			

ADDITIONAL NAMEPLATE DATA:

Decal / Plate	WD=499495	Customer PN	
Notes		Non Rev Ratchet	
Max Temp Rise	80C RISE/RES@1.00SF	OPP/Upper Oil Cap	GREASE
Thermal (WDG)		SHAFT/Lower Oil Cap	GREASE
Altitude			
Regulatory Notes		Regulatory Compliance	CC 030A
COS		Marine Duty	
Balance	0.05 IN/SEC	Arctic Duty	
3/4 Load Eff.	91.9	Inrush Limit	
Motor Weight (LBS)	340	Direction of Rotation	
Sound Level		Special Note 1	
Vertical Thrust (LBS)		Special Note 2	
Thrust Percentage		Special Note 3	
Bearing Life		Special Note 4	
Starting Method		Special Note 5	
Number of Starts		Special Note 6	
200/208V 60Hz Max Amps		SH Max. Temp.	
190V 50 hz Max Amps		SH Voltage	
380V 50 Hz Max Amps		SH Watts	
NEMA Inertia		Load Inertia	
Sumpheater Voltage		Sumpheater Wattage	
Special Accessory Note 1		Special Accessory Note 16	
Special Accessory Note 2		Special Accessory Note 17	
Special Accessory Note 3		Special Accessory Note 18	
Special Accessory Note 4		Special Accessory Note 19	
Special Accessory Note 5		Special Accessory Note 20	
Special Accessory Note 6		Special Accessory Note 21	
Special Accessory Note 7		Special Accessory Note 22	
Special Accessory Note 8		Special Accessory Note 23	
Special Accessory Note 9		Special Accessory Note 24	
Special Accessory Note 10		Special Accessory Note 25	
Special Accessory Note 11		Special Accessory Note 26	
Special Accessory Note 12		Special Accessory Note 27	
Special Accessory Note 13		Special Accessory Note 28	
Special Accessory Note 14		Special Accessory Note 29	
Special Accessory Note 15		Special Accessory Note 30	

NIDEC MOTOR CORPORATION

ST. LOUIS, MO

TYPICAL NAMEPLATE DATA
ACTUAL MOTOR NAMEPLATE LAYOUT MAY VARY
SOME FIELDS MAY BE OMITTED

Nidec trademarks followed by the ® symbol are registered with the U.S. Patent and Trademark Office.

MOTOR PERFORMANCE

MODEL NO.	CATALOG NO.	PHASE	TYPE	FRAME
DE09	8P20P1C	3	CE	256T

ORDER NO.	20838	LINE NO.	

MPI:	81142
HP:	20
POLES:	2
VOLTS:	460
HZ:	60
SERVICE FACTOR:	1.15
EFFICIENCY (%):	
S.F.	90
FULL	91
3/4	91.9
1/2	91.4
1/4	87.2
POWER FACTOR (%):	
S.F.	88.5
FULL	88.9
3/4	88.6
1/2	85.4
1/4	72.5
NO LOAD	12.2
LOCKED ROTOR	37.8
AMPS:	
S.F.	27
FULL	23.1
3/4	17.3
1/2	12
1/4	7.4
NO LOAD	4.8
LOCKED ROTOR	144.2
NEMA CODE LETTER	G
NEMA DESIGN LETTER	B
FULL LOAD RPM	3530
NEMA NOMINAL EFFICIENCY (%)	91
GUARANTEED EFFICIENCY (%)	89.5
MAX KVAR	3.3
AMBIENT (°C)	40
ALTITUDE (FASL)	3300
SAFE STALL TIME-HOT (SEC)	21
SOUND PRESSURE (DBA @ 1M)	68
TORQUES:	
BREAKDOWN{% F.L.}	243
LOCKED ROTOR{% F.L.}	170
FULL LOAD{LB-FT}	29.7

NEMA Nominal and Guaranteed Efficiencies are up to 3,300 feet above sea level and 25 ° C ambient

The Above Data Is Typical, Sinewave Power Unless Noted Otherwise

NIDEC MOTOR CORPORATION
ST. LOUIS, MO

Nidec trademarks followed by the ® symbol are registered with the U.S. Patent and Trademark Office.

499495

Motor Wiring Diagram

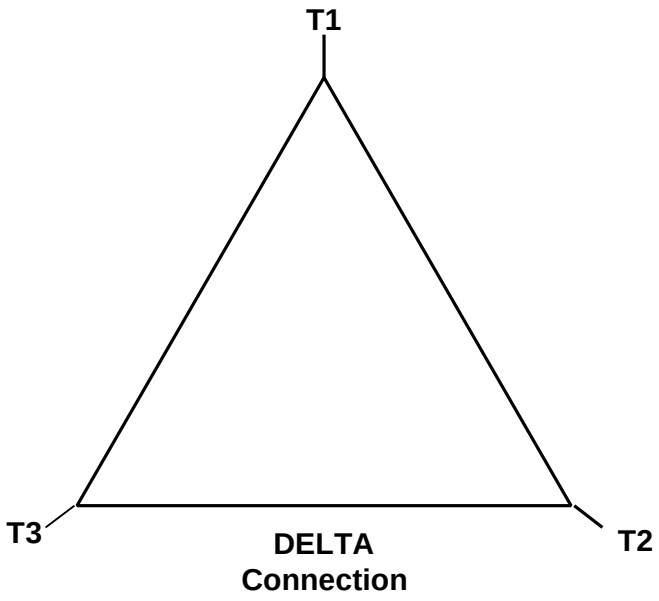

or

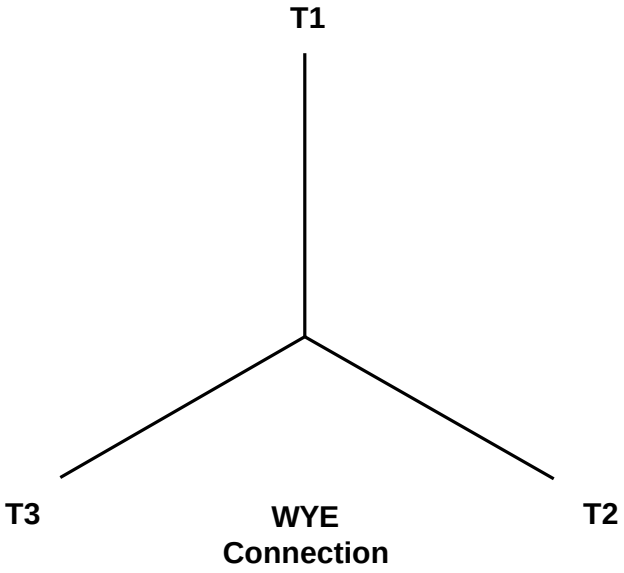

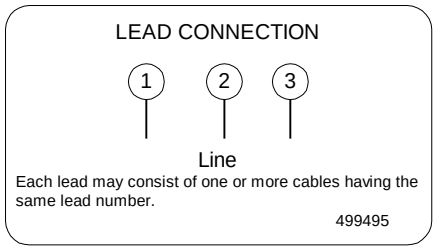

To reverse direction of rotation interchange connections L1 and L2.

Each lead may be comprised of one or more cables.
Each cable will be marked with the appropriate lead number.

EFFECTIVE: 2/27/96
SUPERCEDES: X736618, 96441, 179879, 284138
Connection Plate: 499495
Connection Decal: 912113

RENEWAL PARTS

FRAMES 254T THRU 447T - TOTALLY ENCLOSED AND EXPLOSIONPROOF MOTORS

TYPES: CE, CE1, CE4, CEF, CT, CT1, CT4, CTC, CTE, CTE1, CTE4, CTEF, CTEF1, CTEF4, CTEI, CTEN, CTF, CTF1, CTF4, CTFI, CTFI1, CTFI4, CTFN, CTI, CTI4, CTN, CTNI, EC, ECEI, FCT, FCTF, FCTF1, FCTN, FD, FDF, FDF1, FL, FLC, FLCA, FLCF, FLF, FN, FNC, FTC, FTCF, JAD, JDE, L, L1, L4, LC, LC1, LCA, LCAE, LCE, LCEF, LCEI, LCE1, , LCF, LCFI, LCI, LE, LE1, LE4, LEF, LF, LF1, LF4, LFC, LFI, LI, LN, N, NC, NCE, NCEF, NCF, NCFI, NCI, NE, NF, NN, T, T1, T4, TC, TC1, TC4, TCA, TCE, TCE1, TCE4, TCEF, TCEF4, TCEI, TCEN, TCEP, TCF, TCF1, TCFI, TCI, TCI1, TCN, TE, TEF, TEN, TF, TFC, TFN, TN

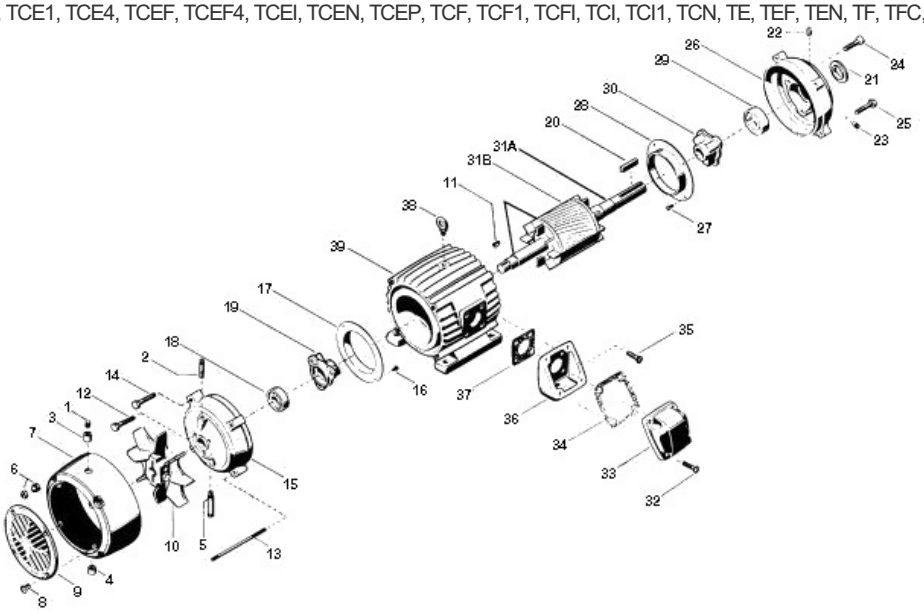

ITEM NO.	QTY	NAME OF PART
1	1	Slotted Headless Pipe Plug
2	1	Pipe Coupling
3	1	Pipe Nipple
4	1	Pipe Cap
5	1	Pipe Nipple
6	2	Cap and Jam Nut
7	1	Fan Cover Guard
8	3	Screw & Lockwasher
9	1	Grill
10	1	Vent Fan Assembly
11	1	Woodruff Key (Not used on frames 254T &256T
12	2	Screw
13	2	Stud & Nut
14	2	Screw (Qty 6 on frames 254T & 256T)
15	1	Bracket
16	4	Screw (Used only on frame 286T & 326T)
17	1	Air Deflector (Used only on frame 286T & 326T)
18	1	Ball Bearing
19	1	Bearing Cap
20	1	Key
21	1	Water Deflector

ITEM NO.	QTY	NAME OF PART
22	1	Slotted Headless Pipe Plug
23	1	Pipe Plug
24	2	Screw
25	4	Screw (Qty 8 on frames 286T & 326T)
26	1	Bracket (Not used on types TF)
27	4	Screw (Used only on frame 286T & 326T)
28	1	Air Deflector ((Used only on frame 286T & 326T)
29	1	Ball Bearing
30	1	Bearing Cap
31	1	Rotor Assembly (Includes items 31A & 31B)
31A	1	Motor Shaft
31B	1	Rotor Core
32	4	Screw
33	1	Outlet Box Cover
34	1	Gasket
35	4	Screw (Qty 2 on frames 254T & 256T)
36	1	Outlet Box Base
37	1	Gasket (Outlet Box Base)
38	1	Eyebolt
39	1	Wound Stator Assembly

WARNING:
Any disassembly or repair work on explosionproof motors will void the Underwriters Laboratories, Inc. label unless done by the manufacturer, or a facility approved by the Underwriters Laboratories, Inc. Refer to your nearest sales office for assistance.

BEARINGS:
Refer to motor nameplate for the bearing numbers.

PRICES:
Parts stocking distributors: refer to renewal parts numerical index. All Others: refer to your nearest parts distributor.

reference: Renewal Parts Section 700, Page 19

Copyright © 2010 Nidec Motor Corporation. All rights reserved.

841 PLUS® Motors
Horizontal A.C. Motors, Totally Enclosed Fan Cooled

Horsepower: 1 – 200 HP

Frame Sizes: 143 – 447

Pole Designs: 2, 4, 6, 8

Design Voltages: 460 and 575 Volts at 60 Hz

Requirements: Meets or exceeds Energy Independence and Security Act of 2007 (EISA);
Meets or exceeds IEEE 841 Standard-2009;
Meets vibration requirements of GM7E-TA

Warranty: 5-year limited warranty

Product Overview and Options

Designed to exceed the industry's most stringent IEEE 841 standards, the U.S. MOTORS® brand 841 PLUS® motors are commonly used in severe duty environments for pumps, compressors, fans, blowers, and other material processing applications. These rugged motors are ideal for constant speed or inverter duty applications typically found in the petroleum, chemical, pulp and paper, wastewater, automotive and mining industries.

U.S. MOTORS brand 841 PLUS motors are rated NEMA Premium®† efficient. Low-loss silicone steel construction and streamlined design enables the motor to operate at lower temperatures resulting in lower energy costs. This motor is designed to operate in ambient temperatures of -30°C to 40°C, in altitudes of up to 1,000 meters above sea level and with NEMA Design B torque-current characteristics. Inertiaload acceleration capabilities for the 841 Plus motor meet the stringent requirements of NEMA MG 1-2009, Section 12.54.

Product Features:

- NEMA Premium®† efficient
- 1.15 Service Factor on sine wave power; 1.0 Service Factor on Inverter Duty
- Class B temperature rise at 1.0 Service Factor by resistance with sine wave power
- Class F insulation materials to increase motor life
- Exceeds NEMA MG1 Part 31 Inverter Duty
- Polyurea grease
- Stainless-steel nameplate
- Variable frequency drive or full voltage, across-the-line starting
- Ground on frame
- Division 2 suitable per NEC article 500 (NFPA 70)
- AFBMA bearing numbers on nameplate
- Protective coating on each rotor and shaft from bearing journal to bearing journal

Inverter Duty

Nidec Motor Corporation's patented inverter grade insulation system allows the U.S. MOTORS brand 841 PLUS motor to withstand spike and transient voltages induced by insulated bipolar gate transistor drives, making it fully compliant with NEMA MG-1, Part 31. This is made possible through:

- Pulse-resistant magnetic wire that provides protection against high-voltage spikes
- Additional lacing on the end turns improve coil rigidity
- Multiple bake cycles to help prevent coil-to-coil circuits
- Phase paper to help prevent phase-to-phase arcs
- Adjustable frequency of 5:1 constant torque or 10:1 variable torque for the full product line.

841 PLUS®

Product Overview and Options *continued*

Typical 841 PLUS® Motor Construction:

1. Corrosion resistant zinc dichromate-plated hardware
2. Heavy duty cast-iron enclosure for long life and reduced vibration
3. Inverter grade insulation
4. Inpro/Seal™ "VBXX" on both ends provides IP56 protection and prolongs motor life by shielding bearings from contaminants in even the harshest environments
5. Special shaft runouts for ball bearing motors of 0.0010 inches for shafts up to 1.625 inches and 0.0015 inches for larger shafts.
6. Same size oversized bearings on each end. Cast iron inner bearing caps
7. Brass breather drains
8. Oversized, double-gasketed and rotatable conduit box to protect against contaminants and correctly position non-braided, non-wicking motor leads
9. Foot flatness machined to within 0.005 inch tolerance ensures easy installation and proper alignment
10. Corrosion-resistant mill and chemical duty paint capable of withstanding a 500-hour salt spray test

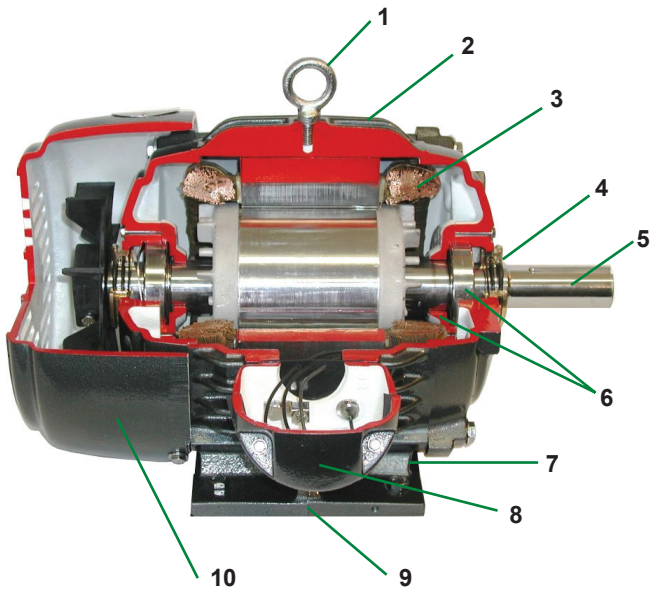

Options and Accessories

Nidec Motor Corporation offers the following custom-design options on the U.S. MOTORS brand 841 PLUS motor:

- SKF CARB™ roller bearings where applicable
- Horizontal or vertical mounting
- Vibration detectors
- Sealed insulation treatments, available on form wound, medium voltage motors above 200 HP, to help shield motor windings
- Winding and bearing thermal protection for motors 250 HP and up
- Inpro/Seal™ MGS grounding shaft rings
- API 661 Duty

841 Plus Stock Motors

- 1 – 200 HP
- 2, 4, 6 pole designs
- 460 and 575 Volts
- Constant or variable torque
- 1–10 HP C-Face Footless

Custom and Conversion Motors

- 1 – 500 HP
- 2, 4, 6, 8 pole designs
- 200, 230, 460, 575, 2300, 4000 Volts
- Constant or variable torque
- C & D flange kits available 140 – 440 frame

Testing and Inspection

Nidec Motor Corporation conducts extensive testing and inspections on each of its U.S. MOTORS brand 841 PLUS motors.

- No load current, power and speed
- High-potential test on stator windings
- Insulation resistance test by megohmeter and polarization index
- Precision balanced to typical vibration levels of less than 0.05 inches per second
- Optional complete test, including full load test

For additional information, please refer to our Full Line Standard Motor Catalog (FL600) or contact your Nidec Motor Corporation representative.

† All marks shown within this document are properties of their respective owners.

Nidec Motor Corporation, 2011; All Rights Reserved. U.S. MOTORS® is a registered trademark of Nidec Motor Corporation. Nidec Motor Corporation trademarks followed by the ® symbol are registered with the U.S. Patent and Trademark Office.

NIDEC MOTOR CORPORATION
8050 W. Florissant Avenue | St. Louis, MO 63136
Phone: 888-637-7333 | Fax: 866-422-7758

Suitability of Integral Horsepower (IHP)* Motors on Variable Frequency Drives

Variable Frequency Drives (VFD)

All Nidec Motor Corporation inverter duty motors have 40°C ambient, 1.0 SF on Inverter Power, 3300 ft. max altitude, 460 voltage or less line power, up to 10:1 speed range on Variable Torque and Class F Insulation.

Nidec Motor Corporation's INVERTER GRADE® insulated motors exceeded NEMA®† MG-1 Part 30 & 31 before the standards were established.

We are a leader in the development of electric motors to withstand pulse width modulated (PWM) drives evolution from power transistors to higher switching frequency insulated gate bipolar transistors (IGBTs).

Today, as the need for medium duty motor inverter applications grows, Nidec Motor Corporation provides products to meet these demands.

Through continued research and development, Nidec Motor Corporation has included the insulation wire from its INVERTER GRADE® motors in all Premium Efficient motors, enhancing their potential inverter compatibility.

Inverter compatibility with motors is complex. As a result, many variables must be considered when determining the suitability of certain types of motors. These variables include:

- Torque requirements (Constant or Variable)
- Speed Range
- Line/System Voltage
- Cable Length between VFD & Motor
- Drive Switching (Carrier) Frequency Motor Construction
- VFD dv/dt
- High Temperatures High Humidity

Wider speed ranges, higher voltages, higher switching frequencies and increased cable lengths all add to the severity of the application and therefore the potential for premature motor failure. Nidec Motor Corporation has differentiated its products into families for your ease of selection for various inverter applications.

Warranty Guidelines

The information within this section refers to the motor and drive application guidelines and limitations for warranty.

Hazardous Location Motors

Use of a variable frequency drive with the motors in this catalog, intended for use in hazardous locations, is only approved for Division 1, Class I, Group D hazardous location motors with a T2B temperature code, with a limitation of 2:1 constant torque or 10:1 variable torque output. No other stock hazardous location motors are inherently suitable for operation with a variable frequency drive. If other requirements are needed, including non-listed Division 2, please contact your Nidec Motor Corporation territory manager to conduct an engineering inquiry.

575 Volt Motors

575 volt motors can be applied on inverters when output filters are used.

Applying INVERTER GRADE® Insulated Motors on Variable Frequency Drives (2, 4, 6 pole)

The products within this catalog labeled "Inverter Duty" or "Vector Duty" are considered INVERTER GRADE® insulated motors. INVERTER GRADE® motors exceed the NEMA®† MG-1 Part 31 standard.

Nidec Motor Corporation provides a three-year limited warranty on all NEMA®† frame INVERTER GRADE® insulated motors and allows long cable runs between the motor and the VFD (limited to 400 feet typical without output filters). Cable distance can be further limited by hot and humid environments and VFD manufacturers cable limits. These motors may be appropriate for certain severe inverter application or when the factors relating to the end use application are undefined (such as spares).

Nidec Motor Corporation's U.S. Motors® brand is available in the following INVERTER GRADE® insulated motors:

- Inverter Duty NEMA®† frame motors good for 10:1 Variable Torque & 5:1 Constant Torque, including Vertical Type RUSI
- Inverter Duty motors rated for 10:1 Constant Torque
- ACCU-Torq® and Vector Duty Motors with full torque to 0 Speed
- 841 Plus® NEMA®† Frame Motors

Applying motors that do not have INVERTER GRADE® insulation on Variable Frequency Drives (2, 4, 6 pole)

Meet NEMA®† MG-1, Section IV, Part 31.4.4.2. They can be used with adjustable frequency drives under the following parameters: On NEMA®† frame motors, 10:1 speed rating on variable torque loads & 4:1 speed range on constant torque loads. On TITAN® frame motors, 10:1 speed rating on variable torque loads. On TITAN® frame motors, inquiry required for suitability on constant torque loads. Cable distances are for reference only and can be further limited by hot and humid environments. Refer to specific VFD manufacturers cable limits.

Cable Distances			
Maximum Cable Distance VFD to Motor			
Switching Frequency	460 Volt	230 Volt	380 Volt
3 Khz	127 ft	400 ft	218 ft
6 Khz	90 ft	307 ft	154 ft
9 Khz	73 ft	251 ft	126 ft
12 Khz	64 ft	217 ft	109 ft
15 Khz	57 ft	194 ft	98 ft
20 Khz	49 ft	168 ft	85 ft

Applying Standard & Energy Efficient Motors on Variable Frequency Drives is not recommended. VFD related failures on standard and energy efficient motors 444 frame and above will not be covered under warranty.

*This information applies only to Integral Horsepower (IHP) motors as defined on the Agency Approval page, under UL®† & CSA®† listings where indicated.

† All marks shown within this document are properties of their respective owners.

Motor / Inverter Compatibility

Thermal Overloads and Single Phase Motors

Motors with thermal overloads installed may not operate properly on a VFD. The current carrying thermal overload is designed for sine wave power. Operation on a VFD may cause nuisance tripping or potentially not protect the motor as would be expected on line power. Thermo-stats or thermistors installed in the motor and connected properly to the VFD may provide suitable thermal overload protection when operating on a VFD. (Consult Codes)

Single phase motors and other fractional horsepower ratings are not designed to be operated on a VFD. Within Nidec Motor Corporation standard products, all motors NEMA®† 48 frame (5.5" diameter) and smaller are not suitable for VFD applications. Three phase 56 and 143/145 frame applications should be noted on the catalog price page; or if in doubt ask an Nidec Motor Corporation technical representative for recommendations on compatibility with a VFD.

Slow Speed Motors

Motors with a base design of slower than six poles require special consideration regarding VFD sizing and minimizing harmonic distortion created at the motor terminals due to cable installation characteristics. Additional external PWM waveform filters and shielded motor cables designed for PWM power may be required to provide acceptable motor life. Harmonic distortion on the output waveform should be kept to a minimum level (less than 10%).

690V Applications

Motors that will be applied to 690VAC PWM VFDs require the use of an external filter to limit peak voltage spikes and the use of an INVERTER GRADE® motor. Where available, an alternative to using an output filter is to upgrade to a 2300V insulation system.

Low Voltage TITAN® Motors

When using 449 frame and larger motors on PWM type VFDs consider the use of an external filter and shielded motor cables designed for PWM power to minimize harmonic distortion and peak voltages at the motor terminals. Harmonic distortion on the output waveform should be kept to a minimum level (less than 10%).

Bearing Currents related to PWM waveform

Due to the uniqueness of this condition occurring in the field, protection of the motor bearings from shaft currents caused by common mode voltages is not a standard feature on sine wave or Inverter Duty motor products, unless explicitly noted. Some installations may be prone to a voltage discharge condition through the motor bearings called fluting.

Fluting damage is related to characteristics of the PWM waveform, VFD programming and characteristics and installation.

Bearing fluting as a result of VFD waveform characteristics may be prevented by the installation of a shaft grounding device such as a brush or ring and/or correction of the installation characteristics causing the shaft voltage condition. Insulated bearing(s) may be required. VFD filters may be needed if bearing fluting is to be avoided.

Multiple Motors on a Single VFD

Special considerations are required when multiple motors are powered from a single VFD unit. Most VFD manufacturers can provide guidelines for proper motor thermal considerations and starting/stopping of motors. Cable runs from the VFD and each motor can create conditions that will cause extra stress on the motor winding. Filters may be required at the motor to provide maximum motor life.

Grounding and Cable Installation Guidelines

Proper output winding and grounding practices can be instrumental in minimizing motor related failures caused by PWM waveform characteristics and installation factors. VFD manufacturers typically provide detailed guidelines on the proper grounding of the motor to the VFD and output cable routing. Cabling manufacturers provide recommended cable types for PWM installations and critical information concerning output wiring impedance and capacitance to ground.

Vertical Motors on VFDs

Vertical motors operated on VFD power present unique conditions that may require consideration by the user or installation engineer:

- Non-reversing-ratchet operation can interfere at low speeds (up to 300 RPM) causing locked rotor and drive tripping.
- Unexpected / unacceptable system vibration and or noise levels caused by the torque pulsation characteristics of the PWM waveform, a system critical frequency falling inside the variable speed range of the process or the added harmonic content of the PWM waveform exciting a system component
- Application related problems related to the controlled acceleration/ deceleration and torque of the motor on VFD power and the building of system pressure/ load.
- The impact the reduction of pump speed has on the down thrust reflected to the pump motor and any minimum thrust requirements of the motor bearings
- Water hammer during shutdown damaging the non-reversing ratchet

Humidity and Non-operational Conditions

The possible build-up of condensation inside the motor due to storage in an uncontrolled environment or non-operational periods in an installation, can lead to an increased rate of premature winding or bearing failures when combined with the stresses associated with PWM waveform characteristics. Moisture and condensation in and on the motor winding over time can provide tracking paths to ground, lower the Megohm resistance of the motor winding to ground, and lower the Corona Inception Voltage level of the winding.

Proper storage and maintenance guidelines are important to minimize the potential of premature failures. Space heaters or trickle voltage heating methods are the preferred methods for drying out a winding that has low megaohm readings. Damage caused by these factors are not covered by the limited warranty provided unless appropriate heating methods are properly utilized during non-operational periods and prior to motor start-up.

NEMA®† Application Guide for AC Adjustable Speed Drive Systems: http://www.nema.org/stds/acadjustable.cfm#download

*This information applies only to Integral Horsepower (IHP) motors as defined on the Agency Approval page, under UL®† & CSA®† listings where indicated.

† All marks shown within this document are properties of their respective owners.