FINAL LAND DEVELOPMENT PLANS
NEW PUBLIC WORKS FACILITY
FOR
TOWNSHIP OF FERGUSON

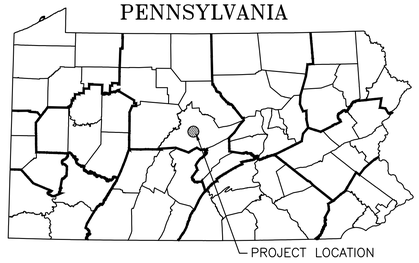

FERGUSON TOWNSHIP, CENTRE COUNTY
PENNSYLVANIA

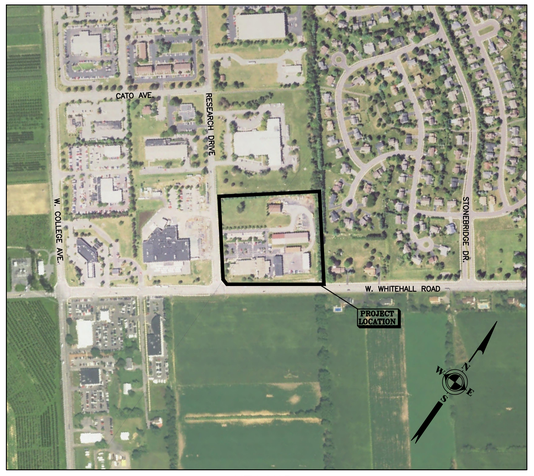

KEY MAP
SCALE 1"=400'

FERGUSON TOWNSHIP BOARD OF SUPERVISORS APPROVAL ACKNOWLEDGEMENT:
APPROVED BY THE FERGUSON TOWNSHIP BOARD OF SUPERVISORS ON _____ __ _____20 ___.

CHAIR _____ DATE _____

SECRETARY _____ DATE _____

FERGUSON TOWNSHIP PLANNING COMMISSION APPROVAL ACKNOWLEDGEMENT:
RECOMMENDED FOR APPROVAL BY THE FERGUSON TOWNSHIP PLANNING COMMISSION ON

_____ __ _____20 ___.

CHAIR _____ DATE _____

SECRETARY _____ DATE _____

FERGUSON TOWNSHIP ENGINEER CERTIFICATION – STORMWATER MANAGEMENT:
I, _____, HAVE REVIEWED THIS STORMWATER MANAGEMENT PLAN IN ACCORDANCE WITH THE DESIGN STANDARDS AND CRITERIA OF THE FERGUSON TOWNSHIP STORMWATER MANAGEMENT ORDINANCE.

_____ _____
DATE

FERGUSON TOWNSHIP ENGINEER CERTIFICATION – LAND DEVELOPMENT PLAN:
I, _____, HAVE REVIEWED AND HEREBY CERTIFY THAT THE PLAN MEETS ALL ENGINEERING DESIGN STANDARDS AND CRITERIA OF THE FERGUSON TOWNSHIP CODE OF ORDINANCES.

_____ _____
TOWNSHIP ENGINEER DATE

DESIGN ENGINEER'S PLAN CERTIFICATION – LAND DEVELOPMENT PLAN:
I, _____, HEREBY CERTIFY THAT THIS PLAN MEETS ALL DESIGN REQUIREMENTS OF THE SUBDIVISION AND LAND DEVELOPMENT ORDINANCE, ZONING ORDINANCE, AND OTHER APPLICABLE CHAPTERS OF THE FERGUSON TOWNSHIP CODE.

_____ _____
DATE

SURVEYOR CERTIFICATION:
I, _____, A PROFESSIONAL LAND SURVEYOR IN THE COMMONWEALTH OF PENNSYLVANIA, DO HEREBY CERTIFY THAT THE PLAN CORRECTLY REPRESENTS THE TRACT OF LAND SHOWN.

_____ _____
ANDREW H. EBERSOLE, P.L.S. DATE
KELLER ENGINEERS

DESIGN ENGINEER PLAN CERTIFICATION – STORMWATER MANAGEMENT:
I, _____, HEREBY CERTIFY THAT THE STORMWATER MANAGEMENT PLAN MEETS ALL DESIGN STANDARDS AND CRITERIA OF THE FERGUSON TOWNSHIP STORMWATER MANAGEMENT ORDINANCE.

_____ _____
DATE

LANDOWNER ACKNOWLEDGEMENT – STORMWATER MANAGEMENT:
WE, FERGUSON TOWNSHIP, THE LANDOWNER, OUR HEIRS AND ASSIGNS, ACKNOWLEDGE THE STORMWATER MANAGEMENT SYSTEM TO BE A PERMANENT FACILITY WHICH CAN BE ALTERED OR REMOVED ONLY AFTER APPROVAL OF A REVISED PLAN BY THE FERGUSON TOWNSHIP BOARD OF SUPERVISORS.

_____ _____
PETER D. BUCKLAND DATE
CHAIRMAN

FIRE COMPANY APPROVAL ACKNOWLEDGEMENT:
RECOMMENDED FOR APPROVAL

_____ _____
APPROVED BY DATE

CERTIFICATION OF OWNERSHIP:
COMMONWEALTH OF PENNSYLVANIA
: SS:
COUNTY OF CENTRE
RECORD BOOK

ON THIS THE _____ DAY OF _____ 20_____, BEFORE ME, A NOTARY PUBLIC IN AND FOR THE COMMONWEALTH OF PENNSYLVANIA, THE UNDERSIGNED OFFICER PERSONALLY APPEARED:
FERGUSON TOWNSHIP

WHO ACKNOWLEDGED THAT THEY ARE THE OWNERS OF THE PROPERTY SHOWN ON THIS PLAN, THAT THE PLAN THEREOF WAS MADE AT THEIR DIRECTION, THAT THEY ACKNOWLEDGES THE SAME TO BE THEIR ACT AND PLAN, AND DESIRES THE SAME TO BE RECORDED AS SUCH.

_____
PETER BUCKLAND
CHAIRMAN

IN WITNESS WHEREOF, I HEREUNTO SET MY HAND AND OFFICIAL SEAL.

_____
_____
NOTARY PUBLIC

MY COMMISSION EXPIRES_____ 20_____

KELLER ENGINEERS
HOLLIDAYSBURG • STATE COLLEGE

DRAWING INDEX		REVISIONS
SHEET	TITLE	
C-001	TITLE	
C-002	INDEX/DEMOLITION PLAN	
C-003	E&S NOTES AND DETAILS	
C-004	E&S PLAN AND DETAILS	
C-005	SITE PLAN	
C-006	GRADING PLAN	
C-007	UTILITY PLAN	
C-008	PCSM LANDSCAPE PLAN	
C-009	PCSM NOTES AND DETAILS	
C-010	PCSM PLAN	
C-011	LIGHTING PLAN	
C-012	PROFILES	
C-013	DETAILS	
C-014	DETAILS	
C-015	DETAILS	

ALL PLAN SHEETS TO BE RECORDED.

PENNSYLVANIA STATE UTILITY ACT LIST
PENNSYLVANIA ONE CALL SERIAL # 2018-043-2291 (PRELIMINARY DESIGN)

THREE DAYS PRIOR TO THE START OF ANY CONSTRUCTION ACTIVITY, THE CONTRACTOR SHALL NOTIFY ALL UTILITIES OF THE PENDING CONSTRUCTION AND NOTIFY THE PENNSYLVANIA ONE CALL SYSTEM AT 1-800-242-1776

THE CONTRACTOR SHALL LOCATE, BOTH IN PLAN AND ELEVATION, ALL EXISTING UTILITIES AND SERVICES WITHIN THE AREA OF CONSTRUCTION, COMPLY WITH THE UNDERGROUND UTILITY LINE PROTECTION LAW, ACT OF 1974, P.L. 852 NO. 287, DATED DECEMBER 12, 1991.

FERGUSON TOWNSHIP
3147 RESERCH DRIVE
STATE COLLEGE, PA 16801
DAVID MOORRICKER
814-238-4651

COLUMBIA GAS OF PA INC
814-278-5842
2550 CAROLEAN IND. DR.
STATE COLLEGE PA, 16801
MARK BRESSLER 814-404-7890

UNIVERSITY AREA JOINT AUTHORITY
814-238-5361
1576 SPRING VALLEY ROAD
STATE COLLEGE, PA 16801
MARK HARTER mharter@uaja.com

STATE COLLEGE BOROUGH WATER AUTHORITY
814-238-6766
1201 W BRANCH RD
STATE COLLEGE, PA 16801
STEVEN ALBRIGHT STEVE@SCBWA.ORG

WEST PENN POWER
814-231-5355
2800 EAST COLLEGE AVENUE
STATE COLLEGE, PA 16801

VERIZON PENNSYLVANIA LLC
814-231-6527
250 SOUTH ALLEN STREET
STATE COLLEGE, PA 16801
DEBORAH BARUM deborah.d.delio@verizon.com

COMCAST CABLE
814-689-6028
250 REESE ROAD
STATE COLLEGE, PA 16801
JEFF WALKER JEFFERY-WALKER2@CABLE.COMCAST.COM

DATE OF ZONING APPLICATION FEBRUARY 6, 2019.

GREENFIELD ARCHITECTS LTD.
An Affiliate of High Real Estate Group LLC
1853 William Penn Way
P.O. Box 10008
Lancaster, PA 17605-0008
(717) 293-4475
FAX (717) 293-4499
www.greenfieldarchitects.net

GREENFIELD ARCHITECTS, LTD.
These plans are copyrighted and are subject to copyright protection as an "architectural work" under Section 102 of the Copyright Act, 17 U.S.O. as amended December 1990 and known as Architectural Copyright Protection Act of 1990. The protection includes but is not limited to the overall form as well as the arrangement and composition of spaces and elements of design. Under such protection, any unauthorized use of these plans, or work represented, can legally result in the penalties provided.

Any reproduction of this document in part or whole without the express written permission of Greenfield Architects, Ltd. is strictly prohibited.

KELLER ENGINEERS
CIVIL • STRUCTURAL • SURVEY
www.keller-engineers.com
3500 E. College Avenue,Suite 1100
State College, PA 16801
P:(814) 231-2925

KELLER ENGINEERS, INC. EXPRESSLY RESERVES ITS COMMON LAW COPYRIGHT AND OTHER RIGHTS IN THESE PLANS AND CLOSING. THEY ARE NOT TO BE REPRODUCED, CHANGED, ALTERED OR COPIED IN ANY FORM OR MANNER, NOR ARE THEY TO BE ASSIGNED WITHOUT WRITTEN PERMISSION AND CONSENT OF KELLER ENGINEERS, INC.

FILE NAME: PLOT/01 TITLE.DWG

No.	Description	Date

FERGUSON PUBLIC WORKS BUILDING

FERGUSON TOWNSHIP

3147 RESEARCH DRIVE
STATE COLLEGE, PA 16801

Project Number	3809-1
Date	2/6/19
Drawn By	AJL
Checked By	BES

TITLE

C-001

GENERAL NOTES:

1. PROPERTY IS CURRENTLY OWNED BY TOWNSHIP OF FERGUSON AS RECORDED IN CENTRE COUNTY RECORD BOOK VOLUME 762 AT PAGE 733 AND INDEXED AS UPI# 24-4-70F.
2. PROPERTY, RIGHT-OF-WAY, EASEMENT, AND BUILDING SETBACK LINES ARE BASED ON CURRENT DEED OF RECORD, RECORDED PLANS, AND EXISTING FIELD EVIDENCE AND ARE NOT THE RESULTS OF A COMPLETE BOUNDARY SURVEY BY KELLER ENGINEERS, INC.
3. HORIZONTAL CONTROL IS BASED UPON NAD 83, PENNSYLVANIA STATE PLANE COORDINATE SYSTEM - NORTH ZONE.
4. VERTICAL CONTROL IS BASED UPON NAVD 88.
5. PROPERTY OWNER:
   TOWNSHIP OF FERGUSON
   3147 RESEARCH DRIVE, STATE COLLEGE, PA 16801
6. DEVELOPMENT TIMETABLE
   OBTAIN MUNICIPAL APPROVAL: SUMMER 2019
   BEGIN CONSTRUCTION: FALL 2019
   COMPLETE CONSTRUCTION: SPRING 2020
7. THE PROPERTY CONSISTS OF 8.88 ACRES.
8. THE DEVELOPMENT IS ZONED IRD - LIGHT INDUSTRY, RESEARCH, AND DEVELOPMENT.
9. THE PROPOSED USE OF THE DEVELOPMENT IS A NEW GARAGE AND OFFICE BUILDING FOR THE PUBLIC WORKS STAFF OF FERGUSON TOWNSHIP.
10. BUILDING SETBACK DISTANCES:
    FRONT = 50'
    SIDE = 25'
    REAR = 50'
11. MAXIMUM ALLOWABLE BUILDING HEIGHT = 45'
12. PROPOSED BUILDING HEIGHT = 28.1'
13. PARKING GENERATION:
    OFFICE SPACE: 1 SPACE PER 250 SF
    (EXISTING 24,894 SF + PROPOSED 2,242 SF = 27,136 SF)
    TOTAL SPACES REQUIRED = 109 ON CAMPUS
    TOTAL SPACES PROVIDED = 109 ON CAMPUS
    HANDICAP ACCESSIBLE PARKING = 7 SPACES TOTAL
14. MAXIMUM BUILDING COVERAGE = 30%
15. MAXIMUM IMPERVIOUS COVERAGE = 60%
16. DENSITY CALCULATIONS:

	EXISTING	PROPOSED
OPEN SPACE	4.57 ACRES (51.4%)	3.56 ACRES (40.1%)
PAVEMENT	3.08 ACRES (34.7%)	3.79 ACRES (42.7%)
BUILDING	1.23 ACRES (13.9%)	1.53 ACRES (17.2%)
TOTAL IMPERVIOUS	4.31 ACRES (48.6%)	5.32 ACRES (59.9%)

    TOTAL LOT SIZE = 8.88 ACRES (386,903.70 SF)
17. ALL AREAS NOT COVERED BY IMPERVIOUS OR GRAVEL SURFACES SHALL BE CONSIDERED AS LAWN AREAS.
18. SOILS ON THE SITE ARE HoB - HAGERSTOWN SILT LOAM (SOIL GROUP C)
19. WATER SERVICE IS SUPPLIED BY, AND SHALL MEET THE REQUIREMENTS OF STATE COLLEGE BOROUGH WATER AUTHORITY.
20. SEWERAGE SERVICE IS SUPPLIED BY, AND SHALL MEET THE REQUIREMENTS OF UNIVERSITY AREA JOINT AUTHORITY.
21. PROPOSED TELEPHONE, ELECTRIC, AND CABLE SERVICE TO BE CONSTRUCTED UNDERGROUND, CONTRACTOR TO COORDINATE EXACT LOCATION WITH RESPECTIVE UTILITY COMPANY.
22. ALL EXTERIOR LIGHTS TO BE FITTED WITH SHIELDS TO PREVENT GLARE ON ADJACENT PROPERTIES.
23. ALL UTILITY TRENCHES TO BE RESTORED TO ORIGINAL OR BETTER CONDITIONS.
24. THE PROPOSED DEVELOPMENT IS OUTSIDE OF THE 100 YEAR FLOODPLAIN.
25. ALL DOWNSPOUTS CONNECT TO THE STORM SEWER SYSTEM.
26. SWPP REFERS TO SMOOTH WALL (INTERIOR) CORRUGATED POLYETHYLENE PIPE.
27. PVC REFERS TO POLYVINYL CHLORIDE.
28. ALL STORMWATER FACILITIES SHALL BE INSPECTED AFTER EACH SIGNIFICANT STORM EVENT AND ON A MONTHLY BASIS. THEY SHALL BE CLEANED FROM ANY DEBRIS OR SEDIMENT DEPOSITS AND RESTORED TO ORIGINAL CONDITIONS.
29. THE CONTRACTOR SHALL BE RESPONSIBLE FOR ALL WORK NECESSARY TO ESTABLISH LINES, LOCATION, GRADES, DIMENSIONS, AND ELEVATIONS OF THE WORK FROM EXISTING FACILITIES.
30. THE CONTRACTOR SHALL EXCAVATE TO THE LINES AND GRADES AS SHOWN ON THIS DRAWING. THE CONTRACTOR SHALL PERFORM ALL EXCAVATION OF EVERY DESCRIPTION AND OF WHATEVER SUBSTANCE ENCOUNTERED TO THE DEPTHS INDICATED. ALL EXCAVATED MATERIAL NOT REQUIRED OR UNSUITABLE FOR FILL SHALL BE REMOVED AND WASTED OFF-PROPERTY.
31. UNLESS OTHERWISE INDICATED ON THIS DRAWING, REMOVE TREES, SHRUBS, GRASS, AND OTHER VEGETATION INTERFERING WITH INSTALLATION OF NEW CONSTRUCTION.
32. THE CONTRACTOR SHALL PROTECT IMPROVEMENTS ON ADJOINING PROPERTIES AND ON THE OWNER'S PROPERTY. IF DAMAGE OCCURS, DAMAGED AREAS SHALL BE RESTORED TO ORIGINAL CONDITION OR AS ACCEPTABLE TO PARTIES HAVING JURISDICTION.
33. ALL DISTURBED AREAS EXCEEDING THE LIMITS OF WORK TO BE RESTORED TO EXISTING CONDITIONS AT THE FULL EXPENSE OF THE CONTRACTOR UNLESS OTHERWISE DIRECTED BY THE OWNER.
34. ALL WORK PERFORMED SHALL BE IN ACCORDANCE WITH THESE SPECIFICATIONS AND THE PENNSYLVANIA DEPARTMENT OF TRANSPORTATION PUBLICATION 408, LATEST EDITION. HEREINAFTER REFERRED TO AS PADOT PUB. 408, AND ALL SUPPLEMENTS THERETO.
35. THE CONTRACTOR SHALL PLACE SEEDING AND SOIL SUPPLEMENTS IN ALL DISTURBED AREAS, AND IN ACCORDANCE WITH SECTION 804 OF THE PADOT PUB. 408. REFER TO "EROSION AND SEDIMENT CONTROL" NOTES FOR SPECIFIC INSTRUCTIONS.
36. THE CONTRACTOR SHALL PLACE MULCHING IN ALL AREAS WHERE SEEDING IS REQUIRED BY THE CONTRACT DRAWING IN ACCORDANCE WITH SECTION 805 OF THE PADOT PUB. 408. PRECAUTIONS SHALL BE TAKEN TO STABILIZE THE MULCH UNTIL THE VEGETATIVE COVER IS ESTABLISHED. MULCH SEEDED AREAS IMMEDIATELY AFTER SEEDING. REFER TO "EROSION AND SEDIMENT CONTROL" NOTES FOR SPECIFIC INSTRUCTIONS.
37. AN EFFORT HAS BEEN MADE TO LOCATE AND SHOW APPROXIMATE LOCATION OF EXISTING UTILITY LINES. ALL UTILITIES ARE NOT NECESSARILY SHOWN. CONTRACTOR SHALL BE RESPONSIBLE FOR CONTACTING ALL UTILITIES TO VERIFY LOCATIONS PRIOR TO START OF CONSTRUCTION IN ACCORDANCE WITH PA ACT 38 OF 1991. THREE DAYS PRIOR TO THE START OF ANY CONSTRUCTION ACTIVITY, THE CONTRACTOR SHALL NOTIFY ALL UTILITIES OF THE PENDING CONSTRUCTION AND NOTIFY THE PENNSYLVANIA ONE CALL SYSTEM AT 1-800-242-1776 AND COMMON GROUND ALLIANCE NATIONAL ONE-CALL AT 811.
38. THE STORMWATER DESIGN REPORT DATED FEBRUARY 2019 (OR LATEST REVISION), IS PART OF THIS LAND DEVELOPMENT APPLICATION.

EXISTING FEATURES LEGEND

- PROPERTY LINE
- RIGHT-OF-WAY LINE
- BUILDING SETBACK LINE
- EASEMENT LINE
- 1134 CONTOUR LINE
- 1135 INDEX CONTOUR LINE
- FENCE LINE
- EDGE OF GRAVEL
- EDGE OF MACADAM
- GUIDE RAIL
- G GAS LINE
- S SEWER LINE
- FM FORCE MAIN LINE
- STORM SEWER
- TEC TELEPHONE, ELECTRIC, CABLE
- FO FIBER OPTIC
- W WATER LINE
- STREAM
- RAILROAD TRACKS
- WETLAND BOUNDARY
- SOIL BOUNDARY

PROPOSED FEATURES LEGEND

- 1134 CONTOUR LINE
- 1135 INDEX CONTOUR LINE
- EDGE OF GRAVEL
- EDGE OF MACADAM
- G GAS LINE
- S SEWER LINE
- STORM SEWER
- E UNDERGROUND ELECTRIC LINE
- COM UNDERGROUND COMMUNICATION LINE
- F FIRE SUPPRESSION (WATER)
- W WATER LINE
- LIMIT OF DISTURBANCE
- NPDES PERMIT BOUNDARY
- CFS COMPOST FILTER SOCK

MIN	MINIMUM
MAX	MAXIMUM
FFE	FIRST FLOOR ELEVATION
R	RADIUS
LF	LINEAR FEET
CO	CLEANOUT
CB	CURB BOX
GM	GAS METER
MB	MAIL BOX
MH	MANHOLE
FH	FIRE HYDRANT
UP	UTILITY POLE
WV	WATER VALVE

- REDUCER
- SIGN
- TRAFFIC FLOW DIRECTION (REPRESENTATION ONLY- NOT TO BE PAINTED)
- MACADAM
- CONCRETE

GREENFIELD ARCHITECTS LTD.

An Affiliate of High Real Estate Group LLC

1853 William Penn Way
P.O. Box 10008
Lancaster, PA 17605-0008
(717) 293-4475
FAX (717) 293-4499
www.greenfieldarchitects.net

GREENFIELD ARCHITECTS, LTD.
These plans are copyrighted and are subject to copyright protection as an "architectural work" under Section 102 of the Copyright Act, 17 U.S.O. as amended December 1990 and known as Architectural Copyright Protection Act of 1990. The protection includes but is not limited to the overall form as well as the arrangement and composition of spaces and elements of design. Under such protection, any unauthorized use of these plans, or work represented, can legally result in the penalties provided.

Any reproduction of this document in part or whole without the express written permission of Greenfield Architects, Ltd. is strictly prohibited.

KELLER ENGINEERS

CIVIL • STRUCTURAL • SURVEY
www.keller-engineers.com
3500 E. College Avenue,Suite 1100
State College, PA 16801
P:(814) 231-2925

KELLER ENGINEERS, INC. EXPRESSLY RESERVES ITS COMMON LAW COPYRIGHT AND OTHER RIGHTS CONCERNING ALL THESE PLANS AND DESIGNS. THEY ARE NOT TO BE REPRODUCED, CHANGED, ALTERED OR COPIED IN ANY FORM OR MANNER, NOR ARE THEY TO BE ASSIGNED WITHOUT WRITTEN PERMISSION AND CONSENT OF KELLER ENGINEERS, INC.

FILE NAME: PLOT/02 INDEX.DWG

SCALE: 1"=30' (30' 0' 30')

No.	Description	Date

FERGUSON PUBLIC WORKS BUILDING

FERGUSON TOWNSHIP

3147 RESEARCH DRIVE
STATE COLLEGE, PA 16801

Project Number	3809-1
Date	2/6/19
Drawn By	AJL
Checked By	BES

INDEX/ DEMOLITION PLAN

C-002

EROSION AND SEDIMENT CONTROL NOTES
GENERAL
1. STORMWATER FROM THIS PROJECT WILL FLOW TO AN ON-SITE SINKHOLE IN THE WATERSHED DRAINING TO AN UNNAMED TRIBUTARY TO SLAB CABIN RUN THAT HAS A DESIGNATED USE ACCORDING TO PA DEP, OF CWF.
2. TOTAL SITE/NPDES ACREAGE = 9.2 ACRES / TOTAL DISTURBANCE = 4.2 ACRES
3. THE EROSION AND SEDIMENT CONTROL PLAN NARRATIVE DATED DECEMBER 2018 IS TO BE CONSIDERED A PART OF THIS CONSTRUCTION SITE PLAN.
4. ALL EARTH DISTURBANCES, INCLUDING CLEARING AND GRUBBING AS WELL AS CUTS AND FILLS SHALL BE DONE IN ACCORDANCE WITH THE APPROVED E&S PLAN. A COPY OF THE APPROVED DRAWINGS (STAMPED, SIGNED AND DATED BY THE REVIEWING AGENCY) MUST BE AVAILABLE AT THE PROJECT SITE AT ALL TIMES. THE REVIEWING AGENCY SHALL BE NOTIFIED OF ANY CHANGES TO THE APPROVED PLAN PRIOR TO IMPLEMENTATION OF THOSE CHANGES. THE REVIEWING AGENCY MAY REQUIRE A WRITTEN SUBMITTAL OF THOSE CHANGES FOR REVIEW AND APPROVAL AT ITS DISCRETION.
5. CONSTRUCTION SHALL NOT COMMENCE UNTIL THE CENTRE COUNTY CONSERVATION DISTRICT HAS APPROVED THE EROSION AND SEDIMENT CONTROL PLAN.
6. IMMEDIATELY UPON DISCOVERING UNFORESEEN CIRCUMSTANCES POSING THE POTENTIAL FOR ACCELERATED EROSION AND/OR SEDIMENT POLLUTION, THE OPERATOR SHALL IMPLEMENT APPROPRIATE BEST MANAGEMENT PRACTICES TO MINIMIZE THE POTENTIAL FOR EROSION AND SEDIMENT POLLUTION AND NOTIFY THE LOCAL CONSERVATION DISTRICT AND/OR THE REGIONAL OFFICE OF THE DEPARTMENT.
7. AT NO TIME SHALL CONSTRUCTION VEHICLES BE ALLOWED TO ENTER AREAS OUTSIDE THE LIMIT OF DISTURBANCE BOUNDARIES SHOWN ON THE PLAN MAPS. THESE AREAS MUST BE CLEARLY MARKED AND FENCED OFF BEFORE CLEARING AND GRUBBING OPERATIONS BEGIN.
8. ALL PUMPING OF WATER FROM ANY WORK AREA SHALL BE DONE ACCORDING TO THE PROCEDURE DESCRIBED IN THIS PLAN, OVER UNDISTURBED VEGETATED AREAS.
9. FAILURE TO CORRECTLY INSTALL E&S BMPS, FAILURE TO PREVENT SEDIMENT-LADEN RUNOFF FROM LEAVING THE CONSTRUCTION SITE, OR FAILURE TO TAKE IMMEDIATE CORRECTIVE ACTION TO RESOLVE FAILURE OF E&S BMPS MAY RESULT IN ADMINISTRATIVE, CIVIL, AND/OR CRIMINAL PENALTIES BEING INSTITUTED BY THE DEPARTMENT AS DEFINED IN SECTION 602 OF THE PENNSYLVANIA CLEAN STREAMS LAW.

DUE DILIGENCE
1. THE PRIMARY CONTRACTOR IS RESPONSIBLE FOR PERFORMING ENVIRONMENTAL DUE DILIGENCE CONCERNING THE USE OF OR DISPOSAL OF CLEAN FILL FROM THIS PROJECT. ENVIRONMENTAL DUE DILIGENCE IS DEFINED AS: INVESTIGATIVE TECHNIQUES, INCLUDING, BUT NOT LIMITED TO, VISUAL PROPERTY INSPECTIONS, ELECTRONIC DATA BASE SEARCHES, REVIEW OF PROPERTY OWNERSHIP, REVIEW OF PROPERTY USE HISTORY, SANBORN MAPS, ENVIRONMENTAL QUESTIONNAIRES, TRANSACTION SCREENS, ANALYTICAL TESTING, ENVIRONMENTAL ASSESSMENTS OR AUDITS. ANALYTICAL TESTING IS NOT A REQUIRED PART OF DUE DILIGENCE UNLESS VISUAL INSPECTION AND/OR REVIEW OF THE PAST LAND USE OF THE PROPERTY INDICATES THAT THE FILL MAY HAVE BEEN SUBJECTED TO A SPILL OR RELEASE OF REGULATED SUBSTANCE. IF THE FILL MAY HAVE BEEN AFFECTED BY A SPILL OR RELEASE OF A REGULATED SUBSTANCE, IT MUST BE TESTED TO DETERMINE IF IT QUALIFIES AS CLEAN FILL. TESTING SHOULD BE PERFORMED IN ACCORDANCE WITH APPENDIX A OF THE PENNSYLVANIA DEPARTMENT OF ENVIRONMENTAL PROTECTION 'S POLICY ENTITLED "MANAGEMENT OF FILL".
2. CLEAN FILL IS DEFINED AS: UNCONTAMINATED, NON-WATER SOLUBLE, NON-DECOMPOSABLE, INERT, SOLID MATERIAL. THE TERM INCLUDES SOIL, ROCK, STONE, DREDGED MATERIAL, USED ASPHALT, AND BRICK, BLOCK OR CONCRETE FROM CONSTRUCTION AND DEMOLITION ACTIVITIES THAT IS SEPARATE FROM OTHER WASTE AND IS RECOGNIZABLE AS SUCH. THE TERM DOES NOT INCLUDE MATERIALS PLACED IN OR ON THE WATERS OF THE COMMONWEALTH UNLESS OTHERWISE AUTHORIZED. (THE TERM "USED ASPHALT" DOES NOT INCLUDE MILLED ASPHALT OR ASPHALT THAT HAS BEEN PROCESSED FOR RE-USE.) CLEAN FILL AFFECTED BY A SPILL OR RELEASE OF A REGULATED SUBSTANCE: FILL MATERIALS AFFECTED BY A SPILL OR RELEASE OF A REGULATED SUBSTANCE STILL QUALIFIES AS CLEAN FILL PROVIDED THE TESTING REVEALS THAT THE FILL MATERIAL CONTAINS CONCENTRATIONS OF REGULATED SUBSTANCES THAT ARE BELOW THE RESIDENTIAL LIMITS AND FOLLOW THE GUIDANCE AS SET FORTH IN DEP POLICY "MANAGEMENT OF FILL".
3. THE CONTRACTOR IS RESPONSIBLE FOR ENSURING THAT ANY MATERIAL BROUGHT ON SITE IS CLEAN FILL. FORM FP-001 MUST BE RETAINED BY THE PROPERTY OWNER FOR ANY FILL MATERIAL AFFECTED BY A SPILL OR RELEASE OF A REGULATED SUBSTANCE BUT QUALIFYING AS CLEAN FILL DUE TO ANALYTICAL TESTING. ALL FILLS SHALL BE COMPACTED AS REQUIRED TO REDUCE EROSION, SLIPPAGE, SETTLEMENT, SUBSIDENCE OR OTHER RELATED PROBLEMS. FILL INTENDED TO SUPPORT BUILDINGS, STRUCTURES AND CONDUITS, ETC. SHALL BE COMPACTED IN ACCORDANCE WITH LOCAL REQUIREMENTS OR CODES.

EARTHWORK
1. TOPSOIL REQUIRED FOR THE ESTABLISHMENT OF VEGETATION SHALL BE STOCKPILED AT THE LOCATION(S) SHOWN ON THE PLAN MAPS(S) IN THE AMOUNT NECESSARY TO COMPLETE THE FINISH GRADING OF ALL EXPOSED AREAS THAT ARE TO BE STABILIZED BY VEGETATION. EACH STOCKPILE SHALL BE PROTECTED IN THE MANNER SHOWN ON THE PLAN DRAWINGS. STOCKPILE HEIGHTS SHALL NOT EXCEED 35 FEET. STOCKPILE SLOPES SHALL BE 2H:1V OR FLATTER.
2. AREAS TO BE FILLED ARE TO BE CLEARED, GRUBBED, AND STRIPPED OF TOPSOIL TO REMOVE TREES, VEGETATION, ROOTS AND OTHER OBJECTIONABLE MATERIAL.
3. ALL FILLS SHALL BE COMPACTED AS REQUIRED TO REDUCE EROSION, SLIPPAGE, SETTLEMENT, SUBSIDENCE OR OTHER RELATED PROBLEMS. FILL INTENDED TO SUPPORT BUILDINGS, STRUCTURES AND CONDUITS, ETC. SHALL BE COMPACTED IN ACCORDANCE WITH LOCAL REQUIREMENTS OR CODES OR IF CONDUCTED, AS RECOMMENDED IN GEOTECHNICAL INVESTIGATION OF PROJECT SITE.
4. ALL EARTHEN FILLS SHALL BE PLACED IN COMPACTED LAYERS NOT TO EXCEED 9 INCHES IN THICKNESS OR, IF CONDUCTED, IN ACCORDANCE WITH GEOTECHNICAL INVESTIGATION OF PROJECT SITE.
5. FILL MATERIALS SHALL BE FREE OF FROZEN PARTICLES, BRUSH, ROOTS, SOD, OR OTHER FOREIGN OR OBJECTIONABLE MATERIALS THAT WOULD INTERFERE WITH OR PREVENT CONSTRUCTION OF SATISFACTORY FILLS.
6. FROZEN MATERIALS OR SOFT, MUCKY, OR HIGHLY COMPRESSIBLE MATERIALS SHALL NOT BE INCORPORATED INTO FILLS.
7. FILL SHALL NOT BE PLACED ON SATURATED OR FROZEN SURFACES.
8. SEEPS OR SPRINGS ENCOUNTERED DURING CONSTRUCTION SHALL BE HANDLED IN ACCORDANCE WITH THE STANDARD AND SPECIFICATION FOR SUBSURFACE DRAIN OR OTHER APPROVED METHOD.
9. ALL OFF-SITE WASTE AND BORROW AREAS MUST HAVE AN E&S PLAN APPROVED BY THE LOCAL CONSERVATION DISTRICT OR THE DEPARTMENT FULLY IMPLEMENTED PRIOR TO BEING ACTIVATED.
10. SHOULD UNANTICIPATED GEOLOGIC OR SOIL CONDITIONS BE ENCOUNTERED DURING EARTHMOVING THAT PRESENT A CONCERN ABOUT THE POTENTIAL FOR THE PRODUCTION OF POLLUTION, ALL EARTHMOVING ACTIVITIES SHALL CEASE UNTIL A QUALIFIED GEO-TECHNICAL PROFESSIONAL EVALUATES THE SITUATION.

BMP CONSTRUCTION AND MAINTENANCE
1. THE PRIME SITE CONTRACTOR SHALL BE RESPONSIBLE FOR MAINTENANCE OF BOTH TEMPORARY AND PERMANENT BMP'S FOR THE DURATION OF THE CONSTRUCTION EFFORT. THE PRIME SITE CONTRACTOR SHALL ALSO BE RESPONSIBLE FOR MAINTENANCE OF ALL BMP'S UNTIL STABILIZATION HAS OCCURRED.
2. UPON STABILIZATION, THE PRIME SITE CONTRACTOR SHALL BE RESPONSIBLE FOR REMOVAL OF ALL TEMPORARY BMP'S. BEFORE ANY TEMPORARY EROSION CONTROL STRUCTURES ARE REMOVED, A VEGETATIVE COVERAGE WITH A DENSITY OF 70% ACROSS THE DISTURBED AREAS MUST BE ACHIEVED.. AFTER PROJECT COMPLETION, THE OWNER WILL BE RESPONSIBLE FOR LONG-TERM MAINTENANCE OF ANY PERMANENT BMP'S.
3. UNTIL THE SITE IS STABILIZED, ALL EROSION AND SEDIMENT BMPS SHALL BE MAINTAINED PROPERLY. MAINTENANCE SHALL INCLUDE INSPECTIONS OF ALL EROSION AND SEDIMENT BMPS AFTER EACH RUNOFF EVENT AND ON A WEEKLY BASIS. ALL PREVENTATIVE AND REMEDIAL MAINTENANCE WORK, INCLUDING CLEAN OUT, REPAIR, REPLACEMENT, REGRADING, RESEEDING, REMULCHING AND RENETTING MUST BE PERFORMED IMMEDIATELY. IF THE E&S BMPS FAIL TO PERFORM AS EXPECTED, REPLACEMENT BMPS, OR MODIFICATIONS OF THOSE INSTALLED WILL BE REQUIRED.
4. A WRITTEN LOG SHOWING DATES THAT E&S BMPS WERE INSPECTED AS WELL AS ANY DEFICIENCIES FOUND AND THE DATE THEY WERE CORRECTED SHALL BE MAINTAINED ON THE SITE AND BE MADE AVAILABLE TO REGULATORY AGENCY OFFICIALS AT THE TIME OF ANY INSPECTIONS. IT IS RECOMMENDED THAT DEP'S VISUAL INSPECTION REPORT FORM (3150-FM-BWEW0083) BE UTILIZED AS THE LOG TO TRACK AND DOCUMENT REQUIRED MAINTENANCE ACTIVITIES INCLUDING ANY CORRECTIONS AND/OR REPAIRS TO BMP'S.
5. BMP MAINTENANCE WILL BE PERFORMED IN ACCORDANCE WITH THE INDIVIDUAL DEVICE SCHEDULES AS SHOWN IN THE STANDARD CONSTRUCTION DETAILS.
6. THE PRIME SITE CONTRACTOR SHALL INSPECT BOTH TEMPORARY AND PERMANENT BMP'S ON THIS SCHEDULE UNTIL STABILIZATION IS ACHIEVED. AT THIS POINT, THE OWNER SHALL COMMENCE WEEKLY INSPECTIONS OF THE PERMANENT FACILITIES.
7. SEDIMENT TRACKED ONTO ANY PUBLIC ROADWAY OR SIDEWALK SHALL BE RETURNED TO THE CONSTRUCTION SITE BY THE END OF EACH WORK DAY AND DISPOSED IN THE MANNER DESCRIBED IN THIS PLAN. IN NO CASE SHALL THE SEDIMENT BE WASHED, SHOVELED, OR SWEPT INTO ANY ROADSIDE DITCH, STORM SEWER, OR SURFACE WATER.
8. ALL SEDIMENT REMOVED FROM BMPS SHALL BE DISPOSED OF IN THE MANNER DESCRIBED ON THE PLAN DRAWINGS.
9. CONCRETE WASH WATER SHALL BE HANDLED IN THE MANNER DESCRIBED ON THE PLAN DRAWINGS. IN NO CASE SHALL IT BE ALLOWED TO ENTER ANY SURFACE WATERS OR GROUNDWATER SYSTEMS.
10. ALL CHANNELS SHALL BE KEPT FREE OF OBSTRUCTIONS INCLUDING BUT NOT LIMITED TO FILL, ROCKS, LEAVES, WOODY DEBRIS, ACCUMULATED SEDIMENT, EXCESS VEGETATION, AND CONSTRUCTION MATERIAL/WASTES.
11. UNDERGROUND UTILITIES CUTTING THROUGH ANY ACTIVE CHANNEL SHALL BE IMMEDIATELY BACKFILLED AND THE CHANNEL RESTORED TO ITS ORIGINAL CROSS-SECTION AND PROTECTIVE LINING. ANY BASE FLOW WITHIN THE CHANNEL SHALL BE CONVEYED PAST THE WORK AREA IN THE MANNER DESCRIBED IN THIS PLAN UNTIL SUCH RESTORATION IS COMPLETE.
12. CHANNELS HAVING RIPRAP, RENO MATTRESS, OR GABION LININGS MUST BE SUFFICIENTLY OVER-EXCAVATED SO THAT THE DESIGN DIMENSIONS WILL BE PROVIDED AFTER PLACEMENT OF THE PROTECTIVE LINING.
13. ALL CHANNELS SHALL BE KEPT FREE OF OBSTRUCTIONS INCLUDING BUT NOT LIMITED TO FILL, ROCKS, LEAVES, WOODY DEBRIS, ACCUMULATED SEDIMENT, EXCESS VEGETATION, AND CONSTRUCTION MATERIAL/WASTES

RECYCLING & DISPOSAL OF WASTE MATERIALS
1. THE PRIMARY SITE CONTRACTOR IS RESPONSIBLE FOR THE PROPER DISPOSAL OF WASTE FROM THIS PROJECT DURING CONSTRUCTION. CONSTRUCTION WASTES ARE THOSE THAT CAN ADVERSELY IMPACT WATER QUALITY AND INCLUDE, BUT ARE NOT LIMITED TO, EXCESS SOIL MATERIALS, BUILDING MATERIALS, CONCRETE WASH-WATER, AND SANITARY WASTES. THE CONTRACTOR WILL INSPECT THE PROJECT AREA WEEKLY AND PROPERLY DISPOSE OF ALL CONSTRUCTION WASTE. LITTERING BY CONSTRUCTION CREWS IS DISCOURAGED; HOUSEKEEPING OF THE SITE AND THE SURROUNDING AREA IS ENCOURAGED. WHENEVER POSSIBLE, REUSABLE WASTES WILL BE SEPARATED FROM OTHER WASTE AND HANDLED FOR RECYCLING.
2. ALL BUILDING MATERIALS AND WASTES SHALL BE REMOVED FROM THE SITE AND RECYCLED OR DISPOSED OF IN ACCORDANCE WITH THE DEPARTMENT'S SOLID WASTE MANAGEMENT REGULATIONS AT 25 PA. CODE 260.1 ET SEQ., 271.1, AND 287.1 ET. SEQ. NO BUILDING MATERIALS OR WASTES OR UNUSED BUILDING MATERIALS SHALL BE BURNED, BURIED, DUMPED, OR DISCHARGED AT THE SITE.
3. CONCRETE WASHOUT A SUITABLE WASHOUT FACILITY MUST BE PROVIDED FOR THE CLEANING OF CONCRETE FROM CHUTES, MIXERS, AND HOPPERS OF THE DELIVERY VEHICLES. UNDER NO CIRCUMSTANCES MAY WASH WATER FROM THESE VEHICLES BE ALLOWED TO ENTER ANY SURFACE WATERS. PROPER SIGNAGE MUST BE PROVIDED SO DRIVERS ARE AWARE OF THE PRESENCE OF WASHOUT FACILITIES. A COMPOST FILTER SOCK WASHOUT AS SHOWN ON THE TYPICAL DETAIL DRAWING OR SUITABLE ALTERNATIVE APPROVED BY THE CONSERVATION DISTRICT OR DEPARTMENT MUST BE PROVIDED ON SITE. DO NOT PLACE WASHOUT FACILITIES WITHIN 50 FEET OF STORM DRAINS, OPEN DITCHES OR SURFACE WATERS, INCLUDING WETLANDS.

SOIL LIMITATIONS AND RESOLUTIONS

SOIL NAME, SYMBOL	CUTBANKS CAVE	CORROSIVE TO CONCRETE/STEEL	DROUGHTY	EASILY ERODIBLE	FLOODING	DEPTH TO SATURATED ZONE SEASONAL HIGH	HYDRIC/ HYDRIC INCLUSIONS	LOW STRENGTH / LANDSLIDE PRONE	SLOW PERCOLATION	PIPING	POOR SOURCE OF TOPSOIL	FROST ACTION	SHRINK - SWELL	POTENTIAL SINKHOLE	PONDING	WETNESS
Hab-HAGERSTOWN SILT LOAM	X	S		X		X	X	X	X	X	X	X	X	X		

POOR SOURCE OF TOPSOIL, UNKNOWN SOIL CONDITIONS - APPLY ADEQUATE RATES OF LIME AND FERTILIZER FOR USE AS SOIL AMENDMENT. SOIL TESTING IS STRONGLY RECOMMENDED. IRRIGATION MAYBE NEEDED WHEN THIS SOIL IS USED FOR LANDSCAPED AREAS OR PCSM BMP'S

CORROSIVITY, LOW STRENGTH, LANDSLIDE POTENTIAL, WETNESS/DEPTH TO HIGH WATER TABLE, PIPING, FROST ACTION, SHRINK SWELL - CONDUCT GEO-TECHNICAL INVESTIGATION IF THESE SOILS WILL BE IMPACTED. SITE & STRUCTURAL BUILDING DESIGN WILL BE BASED ON RESULTS OF GEO-TECHNICAL INVESTIGATION.

SLOW PERCOLATION/POORLY DRAINED, WETNESS/DEPTH TO HIGH WATER TABLE - CONDUCT INFILTRATION TESTING IF THESE SOILS ARE IMPACTED BY PCSM BMP'S

EROSION HAZARD - MINIMIZE DISTURBED AREA; IMPLEMENT STABILIZATION BMP'S IMMEDIATELY. TEMPORARY STABILIZATION MUST BE IMPLEMENTED IMMEDIATELY IN AREAS WHERE ACTIVITY HAS CEASED FOR FOUR (4) OR MORE DAYS.

STABILIZATION
1. STOCKPILED TOPSOIL SHALL BE UTILIZED ON ALL SURFACE AREAS TO RECEIVE PERMANENT STABILIZATION AND SUPPLEMENTED IF NEEDED.
2. AREAS WHICH ARE TO BE TOPSOILED SHALL BE SCARIFIED TO A MINIMUM DEPTH OF 3 TO 5 INCHES -- 6 TO 12 INCHES ON COMPACTED SOILS -- PRIOR TO PLACEMENT OF TOPSOIL. AREAS TO BE VEGETATED SHALL HAVE A MINIMUM 4 INCHES OF TOPSOIL IN PLACE PRIOR TO SEEDING AND MULCHING. FILL OUTSLOPES SHALL HAVE A MINIMUM OF 2 INCHES OF TOPSOIL.
3. CUT OR FILL SLOPES WILL BE SEEDED AND MULCHED IN REGULAR VERTICAL INCREMENTS (15' MAX.) AS THE SLOPE IS BEING CONSTRUCTED.
4. ALL GRADED AREAS SHALL BE PERMANENTLY STABILIZED IMMEDIATELY UPON REACHING FINISHED GRADE. CUT SLOPES IN COMPETENT BEDROCK AND ROCK FILLS NEED NOT BE VEGETATED. SEEDED AREAS WITHIN 50 FEET OF A SURFACE WATER, OR AS OTHERWISE SHOWN ON THE PLAN DRAWINGS, SHALL BE BLANKETED ACCORDING TO THE STANDARDS OF THIS PLAN.
5. WITHIN FOUR(4) DAYS AFTER EARTH DISTURBANCE ACTIVITIES CEASE IN ANY AREA OR SUBAREA OF THE PROJECT, THE OPERATOR SHALL STABILIZE ALL DISTURBED AREAS. DURING NON-GERMINATING MONTHS, MULCH OR PROTECTIVE BLANKETING SHALL BE APPLIED AS DESCRIBED IN THE PLAN. AREAS NOT AT FINISHED GRADE, WHICH WILL BE REACTIVATED WITHIN 1 YEAR, MAY BE STABILIZED IN ACCORDANCE WITH THE TEMPORARY STABILIZATION SPECIFICATIONS. THOSE AREAS WHICH WILL NOT BE REACTIVATED WITHIN 1 YEAR SHALL BE STABILIZED IN ACCORDANCE WITH THE PERMANENT STABILIZATION SPECIFICATIONS.
6. ALL FINAL SLOPES 3:1 OR STEEPER, WITHIN 50 FEET OF A SURFACE WATER, AND/OR ON ANY OTHER DISTURBED AREA SPECIFIED ON THE PLAN DRAWINGS WILL HAVE AN EROSION CONTROL BLANKET INSTALLED IN CONJUNCTION WITH THE PERMANENT VEGETATIVE BMP. NORTH AMERICAN GREEN S75 EROSION CONTROL BLANKET OR EQUIVALENT SHALL BE USED FOR THIS PURPOSE.
7. PERMANENT STABILIZATION IS DEFINED AS A MINIMUM UNIFORM, PERENNIAL 70% VEGETATIVE COVER OR OTHER PERMANENT NON-VEGETATIVE COVER WITH A DENSITY SUFFICIENT TO RESIST ACCELERATED EROSION. CUT AND FILL SLOPES SHALL BE CAPABLE OF RESISTING FAILURE DUE TO SLUMPING, SLIDING, OR OTHER MOVEMENTS.
8. TEMPORARY STABILIZATION WILL BE UTILIZED AS NEEDED DURING PLANNED OR UNPLANNED PROJECT SUSPENSION OR IF THE DISTURBED AREA ACHIEVES FINAL GRADE DURING AN UNFAVORABLE GROWING SEASON. DURING THE WINTER, TEMPORARY STABILIZATION CONSISTS OF MULCHING AT THE RATE OF 3 TONS/ACRE. ALL OTHER TIMES UTILIZE TEMPORARY SEED AND MULCH IN ACCORDANCE WITH THE DETAIL SHOWN IN THIS PLAN.

VEGETATIVE STABILIZATION
TEMPORARY STABILIZATION - PADOT FORMULA E

SEED MIX/SPECIES	PLS**	RATE OF APPLICATION LBS/AC
ANNUAL RYEGRASS	88%	48

MULCH CLEAN OAT OR WHEAT STRAW AT THE RATE OF 3 TONS/ACRE (3 BALES PER 1000 SQUARE FEET) A APPLIED WITH NON-ASPHALTIC EMULSION IN ACCORDANCE WITH MANUFACTURER'S RECOMMENDATION

SOIL AMENDMENTS - STANDARD APPLICATION RATE
FERTILIZER 10-20-20 APPLIED AT RATE OF 500LB/AC*
LIME 1 TON/ACRE*

*SOIL TESTING SUGGESTED FOR PROPER RATE OF APPLICATION
**PLS = PERCENT LIVE SEED

NURSE CROP: (PER PSU "EROSION CONTROL & CONSERVATION PLANTINGS ON NON-CROPLAND")
ONE OF THE FOLLOWING NURSE CROPS MUST BE INCLUDED WITH ANY PERMANENT SEED MIXTURE:

SEED MIX/SPECIES	RATE OF APP. LBS/AC(W/90% + GERM)	RATE OF APP. LBS/AC(W/< 90% GERM)
SPRING OATS	64	80
WINTER WHEAT	690	720
WINTER RYE	56	84

PERMANENT STABILIZATION - PADOT FORMULA B

SEED MIX/SPECIES	PLS**	RATE OF APPLICATION LBS/AC
PERENNIAL RYEGRASS	88.2%	19
CREEPING RED or CHEWING FESCUE	83.3%	29
KENTUCKY BLUEGRASS MIX.	78.4%	53

MULCH CLEAN OAT OR WHEAT STRAW AT THE RATE OF 3 TONS/ACRE (3 BALES PER 1000 SQUARE FEET) APPLIED WITH NON-ASPHALTIC EMULSION IN ACCORDANCE WITH MANUFACTURER'S RECOMMENDATION

SOIL AMENDMENTS - STANDARD APPLICATION RATE
FERTILIZER 10-20-20 APPLIED AT RATE OF 1000 LB/AC*
LIME 6 TON/ACRE*

*SOIL TESTING SUGGESTED FOR PROPER RATE OF APPLICATION
**PLS = PERCENT LIVE SEED

PERMANENT STABILIZATION CONSTRUCTED PCSM BMP
ERNST SEED MIXES - SOW WHERE SHOWN ON PCSM PLAN DRAWING

MIX COMPOSITION - ERNMX-153
35.0% SCHIZACHYRIUM SCOPARIUM, 'CAMPER' (LITTLE BLUESTEM, 'CAMPER')
26.5% BOUTELOUA CURTIPENDULA, 'BUTTE' (SIDEOATS GRAMA, 'BUTTE')
14.0% ELYMUS VIRGINICUS, PA ECOTYPE (VIRGINIA WILDRYE, PA ECOTYPE)
3.5% ECHINACEA PURPUREA (PURPLE CONEFLOWER)
3.0% CHAMAECRISTA FASCICULATA, PA ECOTYPE (PARTRIDGE PEA, PA ECOTYPE)
3.0% COREOPSIS LANCEOLATA (LANCELEAF COREOPSIS)
3.0% RUDBECKIA HIRTA, COASTAL PLAIN NC ECOTYPE (BLACKEYED SUSAN, COASTAL PLAIN NC ECOTYPE)
2.0% ASCLEPIAS TUBEROSA, PA ECOTYPE (BUTTERFLY MILKWEED, PA ECOTYPE)
2.0% HELIOPSIS HELIANTHOIDES, PA ECOTYPE (OXEYE SUNFLOWER, PA ECOTYPE)
2.0% PENSTEMON DIGITALIS, PA ECOTYPE (TALL WHITE BEARDTONGUE, PA ECOTYPE)
1.0% ASTER LAEVIS, NY ECOTYPE (SMOOTH BLUE ASTER, NY ECOTYPE)
1.0% LIATRIS SPICATA, PA ECOTYPE (MARSH (DENSE) BLAZING STAR (SPIKED GAYFEATHER), PA ECOTYPE)
0.6% ASTER NOVAE-ANGLIAE (SYMPHYOTRICHUM N.), PA ECOTYPE (NEW ENGLAND ASTER, PA ECOTYPE)
0.5% BAPTISIA AUSTRALIS, SOUTHERN WV ECOTYPE (BLUE FALSE INDIGO, SOUTHERN WV ECOTYPE)
0.5% TRADESCANTIA OHIENSIS, PA ECOTYPE (OHIO SPIDERWORT, PA ECOTYPE)
0.5% ZIZIA AUREA, PA ECOTYPE (GOLDEN ALEXANDERS, PA ECOTYPE)
0.4% MONARDA FISTULOSA, FORT INDIANTOWN GAP-PA ECOTYPE (WILD BERGAMOT, FORT INDIANTOWN GAP-PA ECOTYPE)
0.4% SENNA HEBECARPA, VA & WV ECOTYPE (WILD SENNA, VA & WV ECOTYPE)
0.3% PYCNANTHEMUM TENUIFOLIUM (NARROWLEAF MOUNTAINMINT)
0.1% ASTER OBLONGIFOLIUS, PA ECOTYPE (AROMATIC ASTER, PA ECOTYPE)
0.1% ASTER PRENANTHOIDES, PA ECOTYPE (ZIGZAG ASTER, PA ECOTYPE)
0.1% BAPTISIA TINCTORIA, PA ECOTYPE (YELLOW FALSE INDIGO (HORSEFLYWEED), PA ECOTYPE)
0.1% PENSTEMON HIRSUTUS (HAIRY BEARDTONGUE)
0.1% RUDBECKIA FULGIDA VAR. FULGIDA, NORTHERN VA ECOTYPE (ORANGE CONEFLOWER, NORTHERN VA ECOTYPE)
0.1% SENNA MARILANDICA (MARYLAND SENNA)
0.1% SOLIDAGO JUNCEA, PA ECOTYPE (EARLY GOLDENROD, PA ECOTYPE)
0.1% SOLIDAGO NEMORALIS, PA ECOTYPE (GRAY GOLDENROD, PA ECOTYPE)
SEED AT 20 LB PER ACRE, OR 1/2 LB PER 1,000 SQ FT

MIX COMPOSITION - ERNMX-183
25.0% PANICUM VIRGATUM, 'SHELTER' (SWITCHGRASS, 'SHELTER')
24.0% PANICUM CLANDESTINUM, 'TIOGA' (DEERTONGUE, 'TIOGA')
22.0% CAREX VULPINOIDEA, PA ECOTYPE (FOX SEDGE, PA ECOTYPE)
21.0% ELYMUS VIRGINICUS, PA ECOTYPE (VIRGINIA WILDRYE, PA ECOTYPE)
6.0% AGROSTIS PERENNANS, ALBANY PINE BUSH-NY ECOTYPE (AUTUMN BENTGRASS, ALBANY PINE BUSH-NY ECOTYPE)
1.0% JUNCUS EFFUSUS (SOFT RUSH)
1.0% PANICUM RIGIDULUM, PA ECOTYPE (REDTOP PANICGRASS, PA ECOTY
SEED AT 20 LB PER ACRE, OR 1/2 LB PER 1,000 SQ FT

MIX COMPOSITION - ERNMX-180-1
45.0% SCHIZACHYRIUM SCOPARIUM, 'CAMPER' (LITTLE BLUESTEM, 'CAMPER')
20.0% ELYMUS VIRGINICUS, PA ECOTYPE (VIRGINIA WILDRYE, PA ECOTYPE)
8.0% PANICUM RIGIDULUM, PA ECOTYPE (REDTOP PANICGRASS, PA ECOTYPE)
7.0% AGROSTIS PERENNANS, ALBANY PINE BUSH-NY ECOTYPE (AUTUMN BENTGRASS, ALBANY PINE BUSH-NY ECOTYPE)
4.5% CAREX VULPINOIDEA, PA ECOTYPE (FOX SEDGE, PA ECOTYPE)
1.0% JUNCUS EFFUSUS (SOFT RUSH)
0.5% CAREX SCOPARIA, PA ECOTYPE (BLUNT BROOM SEDGE, PA ECOTYPE)
SEED AT 15 LBS. PER ACRE WITH A COVER CROP OF GRAIN RYE SEEDED AT 30 LBS. PER ACRE.

BMP SEQUENCE OF INSTALLATION AND REMOVAL
1. THE CONTRACTOR SHALL INVITE A REPRESENTATIVE FROM THE CENTRE COUNTY CONSERVATION DISTRICT TO ATTEND THE PRECONSTRUCTION MEETING AND PROVIDE AT LEAST 7 DAYS NOTICE OF THE PRECONSTRUCTION MEETING TO ALL INVITED ATTENDEES. PERMITTEES, CO-PERMITTEES, OPERATORS, AND LICENSED PROFESSIONALS OR DESIGNEES RESPONSIBLE FOR THE EARTH DISTURBANCE ACTIVITY, INCLUDING IMPLEMENTATION OF E&S AND PCSM PLANS AND CRITICAL STAGES OF IMPLEMENTATION OF THE APPROVED PCSM PLAN, SHALL ATTEND A PRECONSTRUCTION MEETING
2. UPON INSTALLATION OR STABILIZATION OF ALL PERIMETER SEDIMENT CONTROL BMPS AND AT LEAST 3 DAYS PRIOR TO PROCEEDING WITH THE BULK EARTH DISTURBANCE ACTIVITIES, THE PERMITTEE OR CO-PERMITTEE SHALL PROVIDE NOTIFICATION TO THE DEPARTMENT OR AUTHORIZED CONSERVATION DISTRICT.
3. AT LEAST 3 DAYS PRIOR TO STARTING ANY EARTH DISTURBANCE ACTIVITIES, OR EXPANDING INTO AN AREA PREVIOUSLY UNMARKED, THE PENNSYLVANIA ONE CALL SYSTEM INC. SHALL BE NOTIFIED AT 1-800-242-1776 FOR THE LOCATION OF EXISTING UNDERGROUND UTILITIES.
4. ALL EARTH DISTURBANCE ACTIVITIES SHALL PROCEED IN ACCORDANCE WITH THE SEQUENCE PROVIDED ON THE PLAN DRAWINGS. DEVIATION FROM THAT SEQUENCE MUST BE APPROVED BY THE CENTRE COUNTY CONSERVATION DISTRICT OR BY THE DEPARTMENT PRIOR TO IMPLEMENTATION. EACH STEP OF THE SEQUENCE SHALL BE COMPLETED BEFORE PROCEEDING TO THE NEXT STEP, EXCEPT WHERE NOTED.
5. CLEARING, GRUBBING, AND TOPSOIL STRIPPING SHALL BE LIMITED TO THOSE AREAS DESCRIBED IN EACH STAGE OF THE FOLLOWING CONSTRUCTION SEQUENCE. GENERAL SITE CLEARING, GRUBBING, AND TOPSOIL STRIPPING MAY NOT COMMENCE IN ANY STAGE OR PHASE OF THE PROJECT UNTIL THE E&SC BMP'S SPECIFIED BY THE SEQUENCE FOR THAT STAGE OR PHASE HAVE BEEN INSTALLED AND ARE FUNCTIONING AS DESCRIBED IN THIS E&SC PLAN.

SITE SPECIFIC SEQUENCE
STAGE 1
1. FIELD-MARK LIMITS OF DISTURBANCE.
2. INSTALL CONSTRUCTION FENCING AS SHOWN ON DEMOLITION DRAWING, SHEET C-002, NEEDED TO PROTECT EXISTING FEATURES, VEGETATION (TREES), AND FUTURE RAIN GARDEN LOCATION FROM IMPACTS FROM CONSTRUCTION EQUIPMENT.
3. INSTALL ROCK CONSTRUCTION ENTRANCE ACCORDING TO TYPICAL DETAIL AT INTERSECTION WITH RESEARCH DRIVE. STABILIZATION OF CHANNELS AND BERMS
4. INSTALLATION ALL DOWN-SLOPE PERIMETER COMPOST FILTER SOCK ACCORDING TO THE TYPICAL DETAIL AT LOCATIONS SHOWN ON CONSTRUCTION PLAN DRAWINGS.
5. E&SC BMP'S SHALL REMAIN FUNCTIONAL AS SUCH UNTIL ALL AREAS TRIBUTARY TO THEM ARE PERMANENTLY STABILIZED OR UNTIL THEY ARE REPLACED BY ANOTHER BMP APPROVED BY THE LOCAL CONSERVATION DISTRICT OR THE DEPARTMENT.

STAGE 2 SITE EARTHWORK - CLEARING, GRUBBING, AND TOPSOIL STRIPPING CAN NOW BEGIN.
1. STRIP TOPSOIL, STOCKPILE WHERE SHOWN. PROTECT WITH DOWN-SLOPE COMPOST FILTER SOCK AND APPLY TEMPORARY SEED AND MULCH.
2. GRADE SITE, CONSTRUCT BUILDING, EXTEND UTILITIES, PREPARED AREAS TO BE PAVED WITH AGGREGATE SUBBASE.
3. INTERIOR SITE IMPROVEMENTS, WHICH INCLUDE RELOCATION OF OUTSIDE STORAGE AREA AND FUEL ISLAND REMOVAL, CAN BE COMPLETED NOW OR ANY TIME AFTER STAGE 1 E&S BMP IMPLEMENTATION.
4. WHEN FINAL GRADES ARE ACHIEVED OR IN AREAS WHEN WORK HAS CEASED FOR 4 DAYS, STABILIZATION IMPLEMENTATION MUST BEGIN IMMEDIATELY.
5. PERMANENT STABILIZATION
   A. REPLACEMENT OF TOPSOIL (4 - 6 INCHES)
   B. PERMANENT SEEDING
      1) SOIL AMENDMENTS
      2) SEED APPLICATION
      3) MULCH AND/OR BLANKETING
   C. CRUSHED AGGREGATE SURFACES WILL BE APPLIED AS SOON AS ROAD OR PARKING LOT SURFACES HAVE BEEN GRADED.
   D. COMPLETE PAVEMENT.
6. TEMPORARY STABILIZATION, SEEDING AND MULCHING, ACCORDING TO E&S PLAN DETAIL NOTES FOR ALL AREAS WHERE ACTIVITY CEASES FOR 4 DAYS OR MORE, BUT FINAL GRADES HAVE NOT YET BEEN ACHIEVED.
7. UPON COMPLETION OF ALL EARTH DISTURBANCE ACTIVITIES AND PERMANENT STABILIZATION OF ALL DISTURBED AREAS, THE OWNER AND/OR OPERATOR SHALL CONTACT THE LOCAL CONSERVATION DISTRICT TO SCHEDULE AN INSPECTION PRIOR TO CONVERTING E&SC BMP'S TO PCSM BMP'S OR TO SCHEDULE A FINAL INSPECTION IF THE PROJECT IS COMPLETE.

STAGE 3: REMOVAL OF TEMPORARY SEDIMENT POLLUTION
1. TEMPORARY E&SC BMP'S, COMPOST FILTER SOCK AND INLET PROTECTION, CAN BE REMOVED WHEN THE AREAS DRAINING TO THESE BMP'S HAVE ACHIEVED THE REQUIRED LEVEL OF STABILIZATION - DEFINED AS THE ESTABLISHMENT OF A UNIFORM 70% VEGETATIVE COVER OF EROSION RESISTANT PERENNIAL SPECIES OR COVERED WITH AN ACCEPTABLE PERMANENT BMP; SUCH AS, GRAVEL OR PAVEMENT FOR DRIVEWAYS OR SIDEWALKS. STOCKPILED TOPSOIL SHALL BE UTILIZED ON ALL SURFACE AREAS TO RECEIVE PERMANENT STABILIZATION AND SUPPLEMENTED AS NEEDED. PERMANENT VEGETATIVE STABILIZATION SHALL BE DEFINED AS AN ESTABLISHED UNIFORM 70% PERENNIAL VEGETATIVE COVER.
2. AREAS DISTURBED DURING THE REMOVAL OF CONTROLS MUST BE STABILIZED IMMEDIATELY.

STAGE 4: PCSM BMP CONSTRUCTION:
NOTE: CRITICAL STAGE REQUIRING OVERSIGHT BY LICENSED PROFESSIONAL
1. WHEN ALL SURFACES TRIBUTARY TO THE PCSM BMP'S, RAIN GARDENS, BIO-SWALES, AND REFORESTATION/LANDSCAPE RESTORATION AREAS HAVE ACHIEVED PERMANENT VEGETATION, DEFINED AS THE ESTABLISHMENT OF A UNIFORM 70% VEGETATIVE COVER OF EROSION RESISTANT PERENNIAL SPECIES OR COVERED WITH AN ACCEPTABLE PERMANENT BMP; SUCH AS, PAVEMENT FOR STREETS AND SIDEWALKS, THE PCSM BMP'S CAN BE CONSTRUCTED ACCORDING TO THE FOLLOWING SEQUENCE:
2. IMPLEMENTATION OF REFORESTATION AND LANDSCAPE RESTORATION CAN BEGIN.
3. IN ORDER TO PROPERLY CONSTRUCT AND VEGETATIVELY STABILIZE THE PROPOSED NEW BIO-SWALE AND ENHANCED SWALES TO BE CONVERTED TO BIO-SWALES ALONG RESEARCH DRIVE, FLOW MUST BE DIVERTED AWAY BY INSTALLING A STACKED COMPOST FILTER SOCK BELOW THE DRIVEWAY CROSSING PIPE TO PUMP FLOW INTO THE PAVED ROAD CURB AND GUTTER. CONSTRUCTION OF THESE SWALES CAN NOW BEGIN.
4. EXCAVATE BMP'S (BIO SWALES & RAIN GARDENS) TO THE DEPTH NEEDED TO ADD THE SOIL PLANTING MEDIUM TO THE REQUIRED FINAL DEPTH. SCARIFY THE RAIN GARDEN FLOOR TO A MINIMUM DEPTH OF 18 INCHES AND AVOID COMPACTION OF THE BASIN FLOOR.
5. BACKFILL AREA WITH SOIL PLANTING MEDIUM. OVERFILLING OF SOIL IS RECOMMENDED TO ALLOW FOR SETTLEMENT. LIGHT HAND TAMPING IS ACCEPTABLE IF NECESSARY.
6. COMPLETE FINAL LEVELING TO ACHIEVE PROPOSED DESIGN ELEVATIONS LEAVING SPACE FOR UPPER COMPOST LAYER.
7. VEGETATE BMP AS SHOWN ON THE PLANS.
8. OUTFALL DEVICES; SUCH AS, PIPES AND RISERS, CAN NOW BE INSTALLED AND BECOME OPERATIONAL.
9. STABILIZE ALL SURROUNDING DISTURBED SOIL SURFACES BY SEEDING AND MULCHING.
10. UPON ACHIEVING STABILIZATION IN THE BIO-SWALES ALONG RESEARCH DRIVE, THE DIVERSION INTO THE ROAD SIDE CURB AND GUTTER CAN BE REMOVED.
11. ADDITIONAL SITE LANDSCAPE PLANTINGS CAN TAKE PLACE AT THIS TIME OR IN THE NEAR FUTURE.

NOTE:
TEMPORARY SEEDING WILL BE USED AS NEEDED. TEMPORARY SEED AND MULCH (IN ACCORDANCE WITH DETAIL) WILL BE APPLIED IN ALL AREAS WHERE ACTIVITIES CEASE FOR FOUR (4) DAYS OR IF ANY DISTURBED AREA ACHIEVES FINAL GRADE DURING AN UNFAVORABLE SEEDING SEASON.

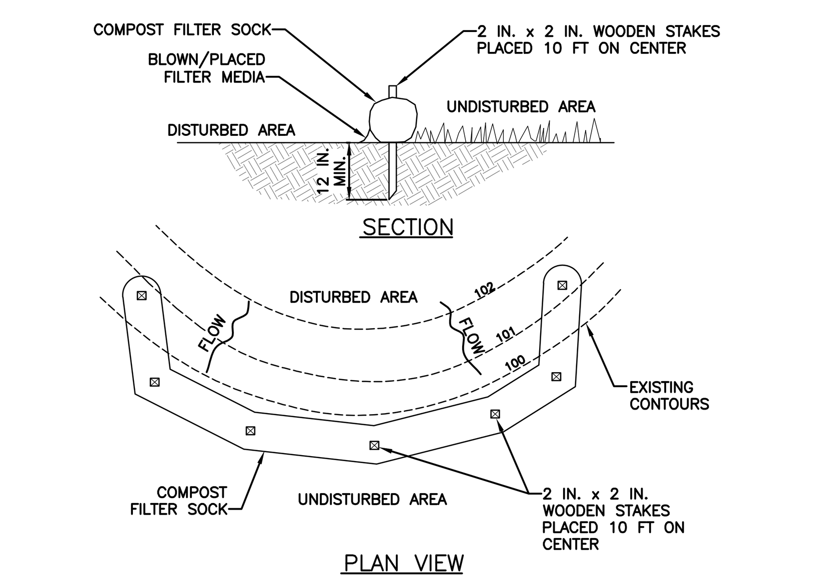

NOTES:

SOCK FABRIC SHALL MEET STANDARDS OF TABLE 4.1 OF THE PA DEP EROSION CONTROL MANUAL. COMPOST SHALL MEET THE STANDARDS OF TABLE 4.2 OF THE PA DEP EROSION CONTROL MANUAL.

COMPOST FILTER SOCK SHALL BE PLACED AT EXISTING LEVEL GRADE. BOTH ENDS OF THE BARRIER SHALL BE EXTENDED AT LEAST 8 FEET UP SLOPE AT 45 DEGREES TO THE MAIN BARRIER ALIGNMENT. MAXIMUM SLOPE LENGTH ABOVE ANY BARRIER SHALL NOT EXCEED THAT SPECIFIED FOR THE SIZE OF THE SOCK AND THE SLOPE OF ITS TRIBUTARY AREA.

TRAFFIC SHALL NOT BE PERMITTED TO CROSS COMPOST FILTER SOCKS.

ACCUMULATED SEDIMENT SHALL BE REMOVED WHEN IT REACHES 1/2 THE ABOVE GROUND HEIGHT OF THE BARRIER AND DISPOSED IN THE MANNER DESCRIBED ELSEWHERE IN THE PLAN.

COMPOST FILTER SOCKS SHALL BE INSPECTED WEEKLY AND AFTER EACH RUNOFF EVENT. DAMAGED SOCKS SHALL BE REPAIRED ACCORDING TO MANUFACTURER'S SPECIFICATIONS OR REPLACED WITHIN 24 HOURS OF INSPECTION.

BIODEGRADABLE COMPOST FILTER SOCKS SHALL BE REPLACED AFTER 6 MONTHS; PHOTODEGRADABLE SOCKS AFTER 1 YEAR. POLYPROPYLENE SOCKS SHALL BE REPLACED ACCORDING TO MANUFACTURER'S RECOMMENDATIONS.

UPON STABILIZATION OF THE AREA TRIBUTARY TO THE SOCK, STAKES SHALL BE REMOVED. THE SOCK MAY BE LEFT IN PLACE AND VEGETATED OR REMOVED. IN THE LATTER CASE, THE MESH SHALL BE CUT OPEN AND THE MULCH SPREAD AS A SOIL SUPPLEMENT.

STANDARD CONSTRUCTION DETAIL #4-1
COMPOST FILTER SOCK
NOT TO SCALE

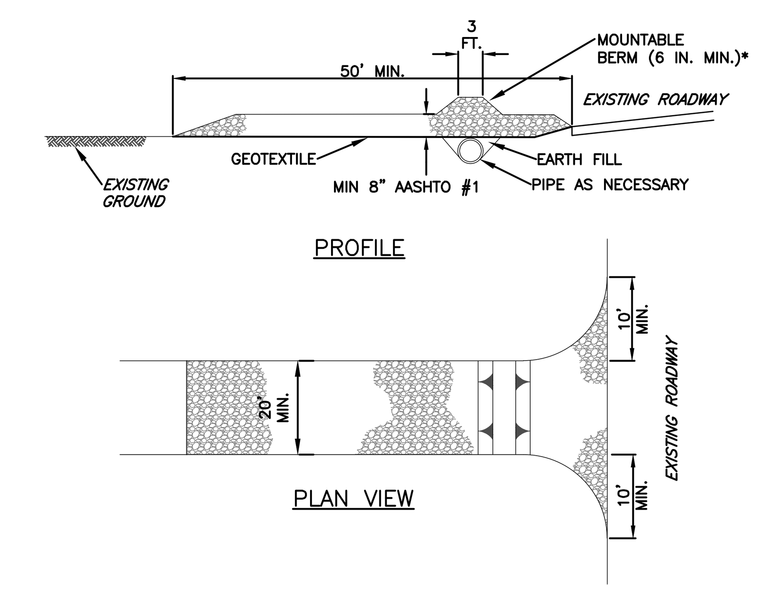

* MOUNTABLE BERM USED TO PROVIDE PROPER COVER FOR PIPE

NOTES:

REMOVE TOPSOIL PRIOR TO INSTALLATION OF ROCK CONSTRUCTION ENTRANCE. EXTEND ROCK OVER FULL WIDTH OF ENTRANCE.

RUNOFF SHALL BE DIVERTED FROM ROADWAY TO A SUITABLE SEDIMENT REMOVAL BMP PRIOR TO ENTERING ROCK CONSTRUCTION ENTRANCE.

MOUNTABLE BERM SHALL BE INSTALLED WHEREVER OPTIONAL CULVERT PIPE IS USED AND PROPER PIPE COVER AS SPECIFIED BY MANUFACTURER IS NOT OTHERWISE PROVIDED. PIPE SHALL BE SIZED APPROPRIATELY FOR SIZE OF DITCH BEING CROSSED.

MAINTENANCE: ROCK CONSTRUCTION ENTRANCE THICKNESS SHALL BE CONSTANTLY MAINTAINED TO THE SPECIFIED DIMENSIONS BY ADDING ROCK. A STOCKPILE SHALL BE MAINTAINED ON SITE FOR THIS PURPOSE. ALL SEDIMENT DEPOSITED ON PAVED ROADWAYS SHALL BE REMOVED AND RETURNED TO THE CONSTRUCTION SITE IMMEDIATELY. IF EXCESSIVE AMOUNTS OF SEDIMENT ARE BEING DEPOSITED ON ROADWAY, EXTEND LENGTH OF ROCK CONSTRUCTION ENTRANCE BY 50 FOOT INCREMENTS UNTIL CONDITION IS ALLEVIATED OR INSTALL WASH RACK. WASHING THE ROADWAY OR SWEEPING THE DEPOSITS INTO ROADWAY DITCHES, SEWERS, CULVERTS, OR OTHER DRAINAGE COURSES IS NOT ACCEPTABLE.

STANDARD CONSTRUCTION DETAIL #3-1
ROCK CONSTRUCTION ENTRANCE
NOT TO SCALE

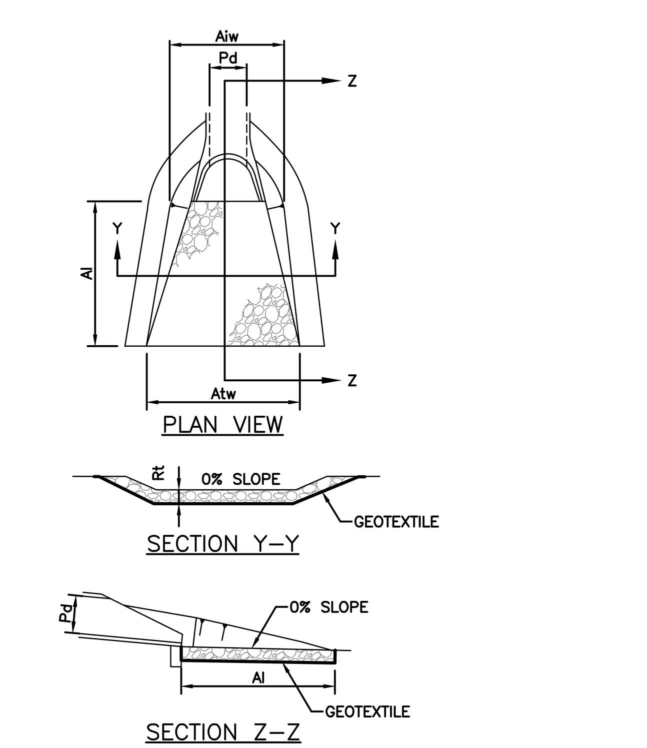

OUTLET NO.	PIPE DIA Pd (IN)	RIPRAP SIZE R-_	RIPRAP THICK. Rt (IN)	APRON LENGTH Al (FT)	APRON INITIAL WIDTH Aiw (FT)	APRON TERMINAL WIDTH Atw (FT)
1	15	4	18	5	3.75	5.75

NOTES:

ALL APRONS SHALL BE CONSTRUCTED TO THE DIMENSIONS SHOWN. TERMINAL WIDTHS SHALL BE ADJUSTED AS NECESSARY TO MATCH RECEIVING CHANNELS.

ALL APRONS SHALL BE INSPECTED AT LEAST WEEKLY AND AFTER EACH RUNOFF EVENT. DISPLACED RIPRAP WITHIN THE APRON SHALL BE REPLACED IMMEDIATELY.

STANDARD CONSTRUCTION DETAIL #9-1
RIPRAP APRON AT PIPE OUTLET
WITH FLARED END SECTION OR ENDWALL
NOT TO SCALE

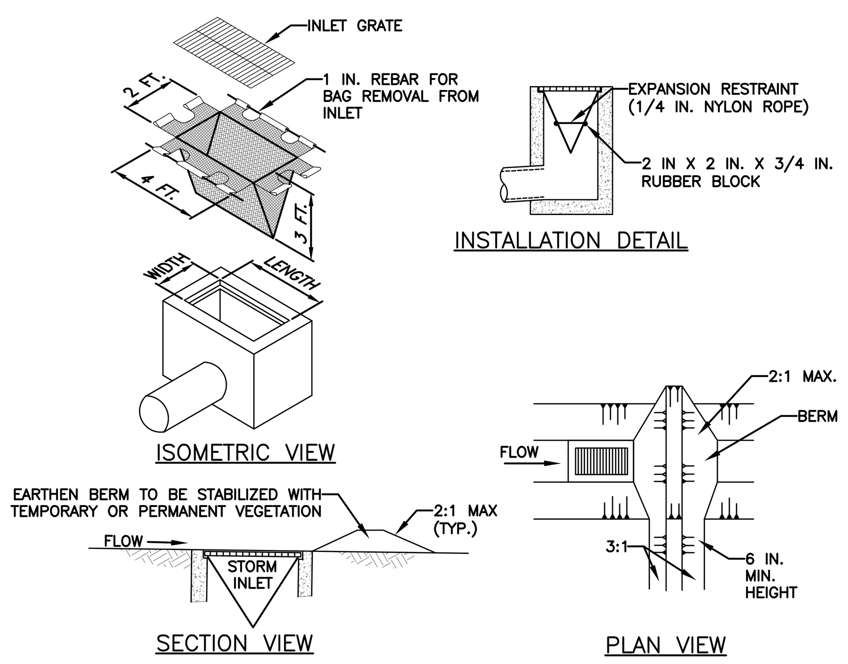

NOTES:

MAXIMUM DRAINAGE AREA = 1/2 ACRE.

INLET PROTECTION SHALL NOT BE REQUIRED FOR INLET TRIBUTARY TO SEDIMENT BASIN OR TRAP. BERMS SHALL BE REQUIRED FOR ALL INSTALLATIONS.

ROLLED EARTHEN BERM IN ROADWAY SHALL BE MAINTAINED UNTIL ROADWAY IS STONED. ROAD SUBBASE BERM ON ROADWAY SHALL BE MAINTAINED UNTIL ROADWAY IS PAVED. EARTHEN BERM IN CHANNEL SHALL BE MAINTAINED UNTIL PERMANENT STABILIZATION IS COMPLETED OR REMAIN PERMANENTLY.

AT A MINIMUM, THE FABRIC SHALL HAVE A MINIMUM GRAB TENSILE STRENGTH OF 120 LBS., A MINIMUM BURST STRENGTH OF 200 PSI, AND A MINIMUM TRAPEZOIDAL TEAR STRENGTH OF 50 LBS. FILTER BAGS SHALL BE CAPABLE OF TRAPPING ALL PARTICLES NOT PASSING A NO. 40 SIEVE.

INLET FILTER BAGS SHALL BE INSPECTED ON A WEEKLY BASIS AND AFTER EACH RUNOFF EVENT. BAGS SHALL BE EMPTIED AND RINSED OR REPLACED WHEN HALF FULL OR WHEN FLOW CAPACITY HAS BEEN REDUCED SO AS TO CAUSE FLOODING OR BYPASSING OF THE INLET. DAMAGED OR CLOGGED BAGS SHALL BE REPLACED. A SUPPLY SHALL BE MAINTAINED ON SITE FOR REPLACEMENT OF BAGS. ALL NEEDED REPAIRS SHALL BE INITIATED IMMEDIATELY AFTER THE INSPECTION. DISPOSE ACCUMULATED SEDIMENT AS WELL AS ALL USED BAGS ACCORDING TO THE PLAN NOTES.

DO NOT USE ON MAJOR PAVED ROADWAYS WHERE PONDING MAY CAUSE TRAFFIC HAZARDS.

STANDARD CONSTRUCTION DETAIL #4-16
FILTER BAG INLET PROTECTION - TYPE M INLET
NOT TO SCALE

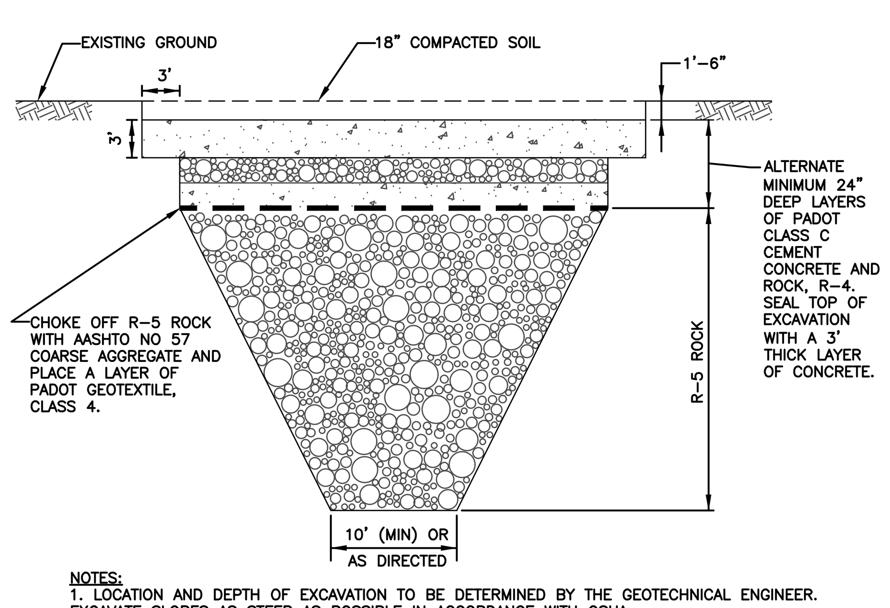

NOTES:
1. LOCATION AND DEPTH OF EXCAVATION TO BE DETERMINED BY THE GEOTECHNICAL ENGINEER. EXCAVATE SLOPES AS STEEP AS POSSIBLE IN ACCORDANCE WITH OSHA.
2. BEDROCK LOCATION BELOW BOTTOM OF EXCAVATION GENERALLY GREATER THAN 25 FEET.

TYPE I SINKHOLE REPAIR

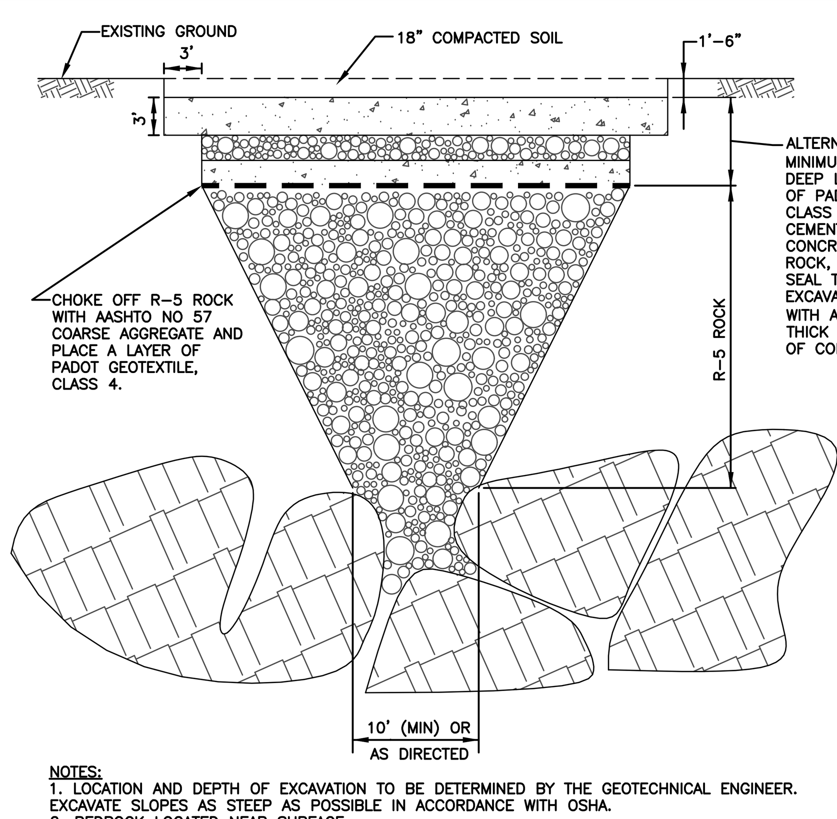

NOTES:
1. LOCATION AND DEPTH OF EXCAVATION TO BE DETERMINED BY THE GEOTECHNICAL ENGINEER. EXCAVATE SLOPES AS STEEP AS POSSIBLE IN ACCORDANCE WITH OSHA.
2. BEDROCK LOCATED NEAR SURFACE.

TYPE II SINKHOLE REPAIR

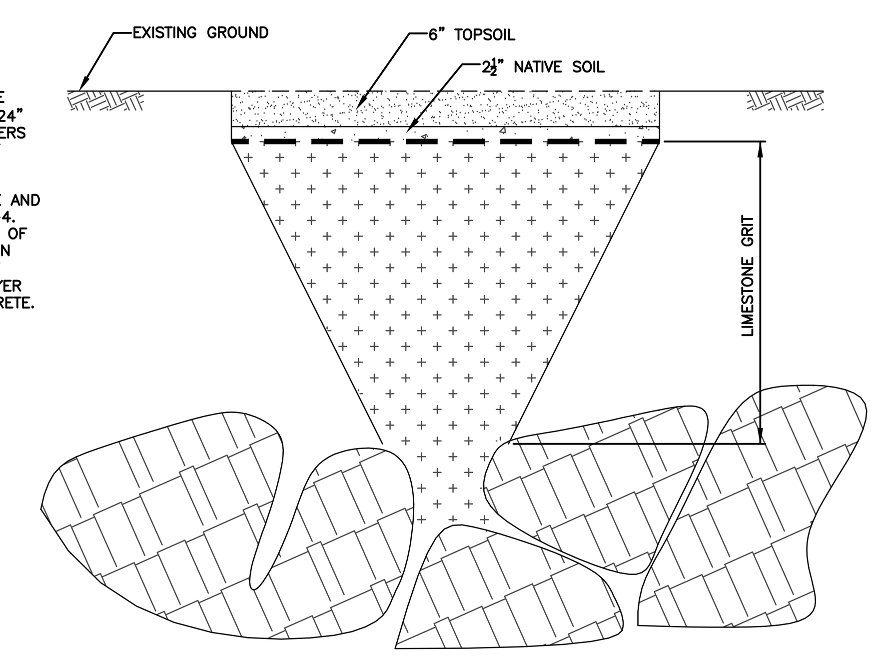

SEQUENCE:
- EXCAVATE TO EXPOSE THROAT
- FLUSH WITH FIRE HOSE AND LIMESTONE GRIT PER PUBLIC WORKS DIRECTOR DIRECTION
- PLACE 2½" COMPACTED NARRATIVE SOIL
- PLACE 6" TOPSOIL AND SEED

TYPE III SINKHOLE REPAIR IN DRAINAGE WAYS

GREENFIELD ARCHITECTS LTD.
An Affiliate of High Real Estate Group LLC
1853 William Penn Way
P.O. Box 10008
Lancaster, PA 17605-0008
(717) 293-4475
FAX (717) 293-4499
www.greenfieldarchitects.net

GREENFIELD ARCHITECTS, LTD.
These plans are copyrighted and are subject to copyright protection as an "architectural work" under Section 102 of the Copyright Act, 17 U.S.O. as amended December 1990 and known as Architectural Copyright Protection Act of 1990. The protection includes but is not limited to the overall form as well as the arrangement and composition of spaces and elements of design. Under such protection, any unauthorized use of these plans, or work represented, can legally result in the penalties provided.

Any reproduction of this document in part or whole without the express written permission of Greenfield Architects, Ltd. is strictly prohibited.

KELLER ENGINEERS
CIVIL • STRUCTURAL • SURVEY
www.keller-engineers.com
3500 E. College Avenue,Suite 1100
State College, PA 16801
P:(814) 231-2925

KELLER ENGINEERS, INC. EXPRESSLY RESERVES ITS COMMON LAW COPYRIGHT AND OTHER RIGHTS CONTAINED IN THESE PLANS AND DESIGNS. THEY ARE NOT TO BE REPRODUCED, CHANGED, ALTERED OR COPIED IN ANY FORM OR MANNER, NOR ARE THEY TO BE ASSIGNED WITHOUT WRITTEN PERMISSION AND CONSENT OF KELLER ENGINEERS, INC.

FILE NAME: PLOT/03 E-S NOTES.DWG

No.	Description	Date

FERGUSON PUBLIC WORKS BUILDING

FERGUSON TOWNSHIP

3147 RESEARCH DRIVE
STATE COLLEGE, PA 16801

Project Number	3809-1
Date	2/6/19
Drawn By	AJL
Checked By	BES

E&S NOTES AND DETAILS

C-003

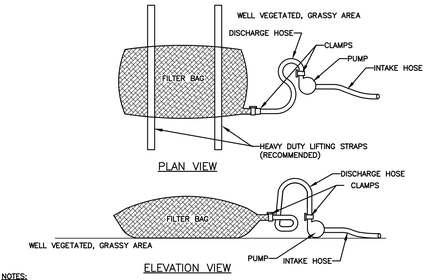

NOTES:

LOW VOLUME FILTER BAGS SHALL BE MADE FROM NON-WOVEN GEOTEXTILE MATERIAL SEWN WITH HIGH STRENGTH, DOUBLE STITCHED "J" TYPE SEAMS. THEY SHALL BE CAPABLE OF TRAPPING PARTICLES LARGER THAN 150 MICRONS. HIGH VOLUME FILTER BAGS SHALL BE MADE FROM WOVEN GEOTEXTILES THAT MEET THE FOLLOWING STANDARDS:

PROPERTY	TEST METHOD	MINIMUM STANDARD
AVG. WIDE WIDTH STRENGTH	ASTM D-4884	60 LB/IN
GRAB TENSILE	ASTM D-4632	205 LB
PUNCTURE	ASTM D-4833	110 LB
MULLEN BURST	ASTM D-3786	350 PSI
UV RESISTANCE	ASTM D-4355	70%
AOS % RETAINED	ASTM D-4751	80 SIEVE

A SUITABLE MEANS OF ACCESSING THE BAG WITH MACHINERY REQUIRED FOR DISPOSAL PURPOSES SHALL BE PROVIDED. FILTER BAGS SHALL BE REPLACED WHEN THEY BECOME 1/2 FULL OF SEDIMENT. SPARE BAGS SHALL BE KEPT AVAILABLE FOR REPLACEMENT OF THOSE THAT HAVE FAILED OR ARE FILLED. BAGS SHALL BE PLACED ON STRAPS TO FACILITATE REMOVAL UNLESS BAGS COME WITH LIFTING STRAPS ALREADY ATTACHED.

BAGS SHALL BE LOCATED IN WELL-VEGETATED (GRASSY) AREA, AND DISCHARGE ONTO STABLE, EROSION RESISTANT AREAS. WHERE THIS IS NOT POSSIBLE, A GEOTEXTILE UNDERLAYMENT AND FLOW PATH SHALL BE PROVIDED. BAGS MAY BE PLACED ON FILTER STONE TO INCREASE DISCHARGE CAPACITY. BAGS SHALL NOT BE PLACED ON SLOPES GREATER THAN 5%. FOR SLOPES EXCEEDING 5%, CLEAN ROCK OR OTHER NON-ERODIBLE AND NON-POLLUTING MATERIAL MAY BE PLACED UNDER THE BAG TO REDUCE SLOPE STEEPNESS.

NO DOWNSLOPE SEDIMENT BARRIER IS REQUIRED FOR MOST INSTALLATIONS. COMPOST BERM OR COMPOST FILTER SOCK SHALL BE INSTALLED BELOW BAGS LOCATED IN HQ OR EV WATERSHEDS, WITHIN 50 FEET OF ANY RECEIVING SURFACE WATER OR WHERE GRASSY AREA IS NOT AVAILABLE.

THE PUMP DISCHARGE HOSE SHALL BE INSERTED INTO THE BAGS IN THE MANNER SPECIFIED BY THE MANUFACTURER AND SECURELY CLAMPED. A PIECE OF PVC PIPE IS RECOMMENDED FOR THIS PURPOSE.

THE PUMPING RATE SHALL BE NO GREATER THAN 750 GPM OR 1/2 THE MAXIMUM SPECIFIED BY THE MANUFACTURER, WHICHEVER IS LESS. PUMP INTAKES SHALL BE FLOATING AND SCREENED.

FILTER BAGS SHALL BE INSPECTED DAILY. IF ANY PROBLEM IS DETECTED, PUMPING SHALL CEASE IMMEDIATELY AND NOT RESUME UNTIL THE PROBLEM IS CORRECTED.

STANDARD CONSTRUCTION DETAIL #3-16
PUMPED WATER FILTER BAG

NOT TO SCALE

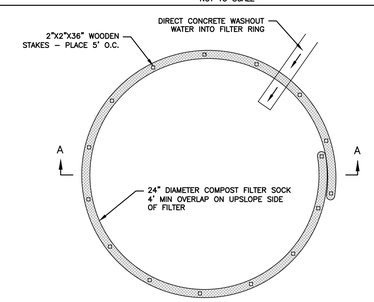

NOTES:
- 1. INSTALL ON FLAT GRADE FOR OPTIMUM PERFORMANCE.
- 2. 18" DIAMETER FILTER SOCK MAY BE STACKED ONTO DOUBLE
- 24" DIAMETER SOCKS IN PYRAMIDAL CONFIGURATION FOR
- ADDED HEIGHT.
- IMPERVIOUS PLASTIC SHEETING SHOULD BE PLACED AT THE LOCATION OF THE WASHOUT.
- STAKE COMPOST SOCKS AS RECOMMENDED BY THE MANUFACTURER AROUND PERIMETER OF THE PLASTIC SHEETING SO AS TO FORM A RING WITH THE ENDS OF THE SOCK LOCATED AT THE UPSLOPE CORNER.
- ENSURE CONTINUOUS CONTACT OF THE SOCK WITH THE PLASTIC SHEETING AT ALL LOCATIONS.
- WHERE NECESSARY, SOCKS MAY BE STACKED AND STAKED SO AS TO FORM A TRIANGULAR CROSS-SECTION.
- PLACE AT A CONVENIENT LOCATION FOR ACCESS BY THE CONCRETE TRUCKS, PREFERABLY NEAR THE PLACE WHERE THE CONCRETE IS BEING POURED, BUT FAR ENOUGH FROM OTHER VEHICULAR TRAFFIC TO MINIMIZE THE POTENTIAL FOR ACCIDENTAL DAMAGE OR SPILLS. WHEREVER POSSIBLE, THEY SHOULD BE LOCATED ON SLOPES NOT EXCEEDING A 2% GRADE.
- THE WASHOUT MUST CLEANED OF ACCUMULATED MATERIAL WHEN FACILITY IS 75% FULL.
- MATERIAL CLEANED OUT OF DEVICE MUST BE PROPERLY DISPOSED. MATERIAL SUITABLE TO MIX WITH TOPSOIL CAN BE DEPOSITED IN/ON THE SITE'S TOPSOIL STOCKPILES WHICH ARE PROTECTED WITH DOWNSLOPE PERIMETER SEDIMENT BARRIERS. WHEN WASHOUT IS NO LONGER NEEDED THE PLASTIC SHEETING AND USED FILTER SOCK MUST BE TAKEN TO A LANDFILL FOR PROPER DISPOSAL.

CONCRETE WASHOUT

NOT TO SCALE

GREENFIELD ARCHITECTS LTD.

An Affiliate of High Real Estate Group LLC

1853 William Penn Way
P.O. Box 10008
Lancaster, PA 17605-0008
(717) 293-4475
FAX (717) 293-4499
www.greenfieldarchitects.net

GREENFIELD ARCHITECTS, LTD.
These plans are copyrighted and are subject to copyright protection as an "architectural work" under Section 102 of the Copyright Act, 17 U.S.O. as amended December 1990 and known as Architectural Copyright Protection Act of 1990. The protection includes but is not limited to the overall form as well as the arrangement and composition of spaces and elements of design. Under such protection, any unauthorized use of these plans, or work represented, can legally result in the penalties provided.

Any reproduction of this document in part or whole without the express written permission of Greenfield Architects, Ltd. is strictly prohibited.

KELLER ENGINEERS

CIVIL • STRUCTURAL • SURVEY

www.keller-engineers.com

3500 E. College Avenue,Suite 1100
State College, PA 16801
P:(814) 231-2925

KELLER ENGINEERS, INC. EXPRESSLY RESERVES ITS COMMON LAW COPYRIGHT AND OTHER RIGHTS CONTAINED IN THESE PLANS AND DESIGNS. THEY ARE NOT TO BE REPRODUCED, CHANGED, ALTERED OR COPIED IN ANY FORM OR MANNER, NOR ARE THEY TO BE ASSIGNED WITHOUT WRITTEN PERMISSION AND CONSENT OF KELLER ENGINEERS, INC.

FILE NAME: PLOT/04 E-S PLAN.DWG

SCALE: 1"=30' (30' 0' 30')

No.	Description	Date

FERGUSON PUBLIC WORKS BUILDING

FERGUSON TOWNSHIP

3147 RESEARCH DRIVE
STATE COLLEGE, PA 16801

Project Number	3809-1
Date	2/6/19
Drawn By	AJL
Checked By	BES

E&S PLAN AND DETAILS

C-004

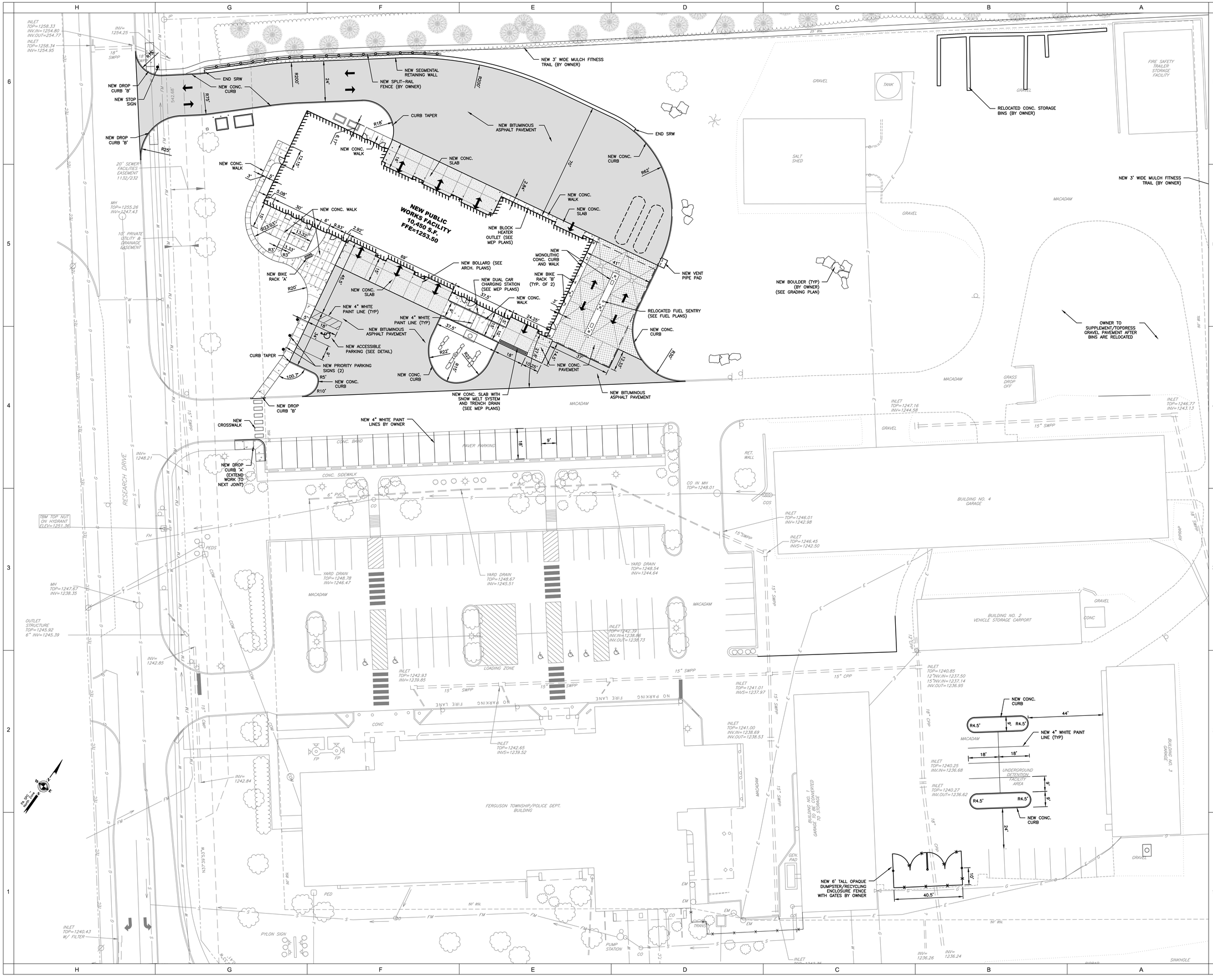

GREENFIELD ARCHITECTS LTD.

An Affiliate of High Real Estate Group LLC

1853 William Penn Way
P.O. Box 10008
Lancaster, PA 17605-0008
(717) 293-4475
FAX (717) 293-4499
www.greenfieldarchitects.net

GREENFIELD ARCHITECTS, LTD.
These plans are copyrighted and are subject to copyright protection as an "architectural work" under Section 102 of the Copyright Act, 17 U.S.O. as amended December 1990 and known as Architectural Copyright Protection Act of 1990. The protection includes but is not limited to the overall form as well as the arrangement and composition of spaces and elements of design. Under such protection, any unauthorized use of these plans, or work represented, can legally result in the penalties provided.

Any reproduction of this document in part or whole without the express written permission of Greenfield Architects, Ltd. is strictly prohibited.

KELLER ENGINEERS

CIVIL • STRUCTURAL • SURVEY
www.keller-engineers.com

3500 E. College Avenue,Suite 1100
State College, PA 16801
P:(814) 231-2925

KELLER ENGINEERS, INC. EXPRESSLY RESERVES ITS COMMON LAW COPYRIGHT AND OTHER RIGHTS CONTAINED IN THESE PLANS AND DESIGNS. THEY ARE NOT TO BE REPRODUCED, CHANGED, ALTERED OR COPIED IN ANY FORM OR MANNER, NOR ARE THEY TO BE ASSIGNED WITHOUT WRITTEN PERMISSION AND CONSENT OF KELLER ENGINEERS, INC.

FILE NAME: PLOT/05 SITE.DWG

SCALE: 1"=20' (20' 0' 20')

No.	Description	Date

FERGUSON PUBLIC WORKS BUILDING

FERGUSON TOWNSHIP

3147 RESEARCH DRIVE
STATE COLLEGE, PA 16801

Project Number	3809-1
Date	2/6/19
Drawn By	AJL
Checked By	BES

SITE PLAN

C-005

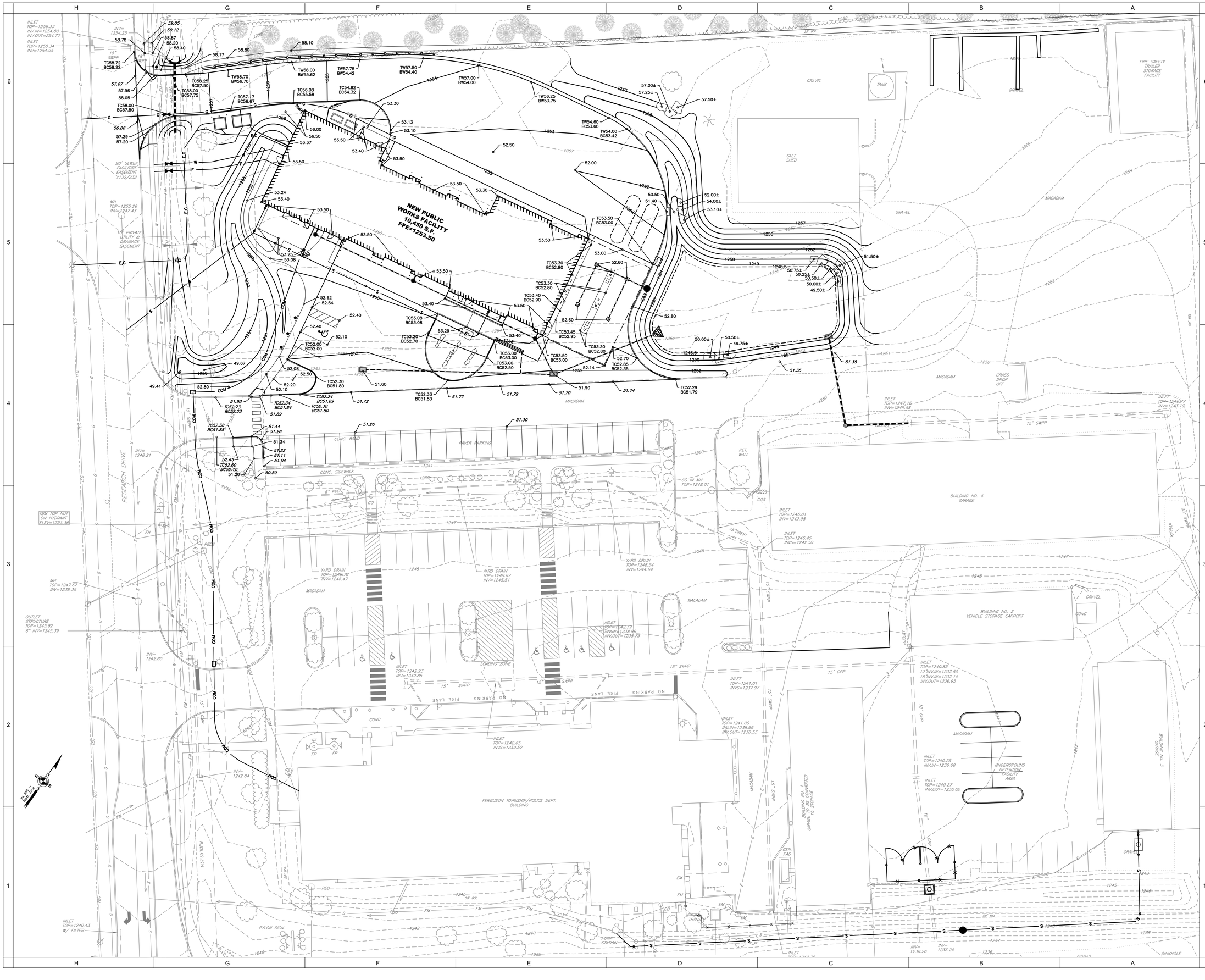

GREENFIELD ARCHITECTS LTD.
An Affiliate of High Real Estate Group LLC
1853 William Penn Way
P.O. Box 10008
Lancaster, PA 17605-0008
(717) 293-4475
FAX (717) 293-4499
www.greenfieldarchitects.net

GREENFIELD ARCHITECTS, LTD.
These plans are copyrighted and are subject to copyright protection as an "architectural work" under Section 102 of the Copyright Act, 17 U.S.O. as amended December 1990 and known as Architectural Copyright Protection Act of 1990. The protection includes but is not limited to the overall form as well as the arrangement and composition of spaces and elements of design. Under such protection, any unauthorized use of these plans, or work represented, can legally result in the penalties provided.

Any reproduction of this document in part or whole without the express written permission of Greenfield Architects, Ltd. is strictly prohibited.

KELLER ENGINEERS
CIVIL • STRUCTURAL • SURVEY
www.keller-engineers.com
3500 E. College Avenue,Suite 1100
State College, PA 16801
P:(814) 231-2925

KELLER ENGINEERS, INC. EXPRESSLY RESERVES ITS COMMON LAW COPYRIGHT AND OTHER RIGHTS CONTAINED IN THESE PLANS AND DESIGNS. THEY ARE NOT TO BE REPRODUCED, CHANGED, ALTERED OR COPIED IN ANY FORM OR MANNER, NOR ARE THEY TO BE ASSIGNED WITHOUT WRITTEN PERMISSION AND CONSENT OF KELLER ENGINEERS, INC.

FILE NAME: PLOT/06 GRADING.DWG

SCALE: 1"=20' 20' 0' 20'

No.	Description	Date

FERGUSON PUBLIC WORKS BUILDING

FERGUSON TOWNSHIP

3147 RESEARCH DRIVE
STATE COLLEGE, PA 16801

Project Number	3809-1
Date	2/6/19
Drawn By	AJL
Checked By	BES

GRADING PLAN

C-006

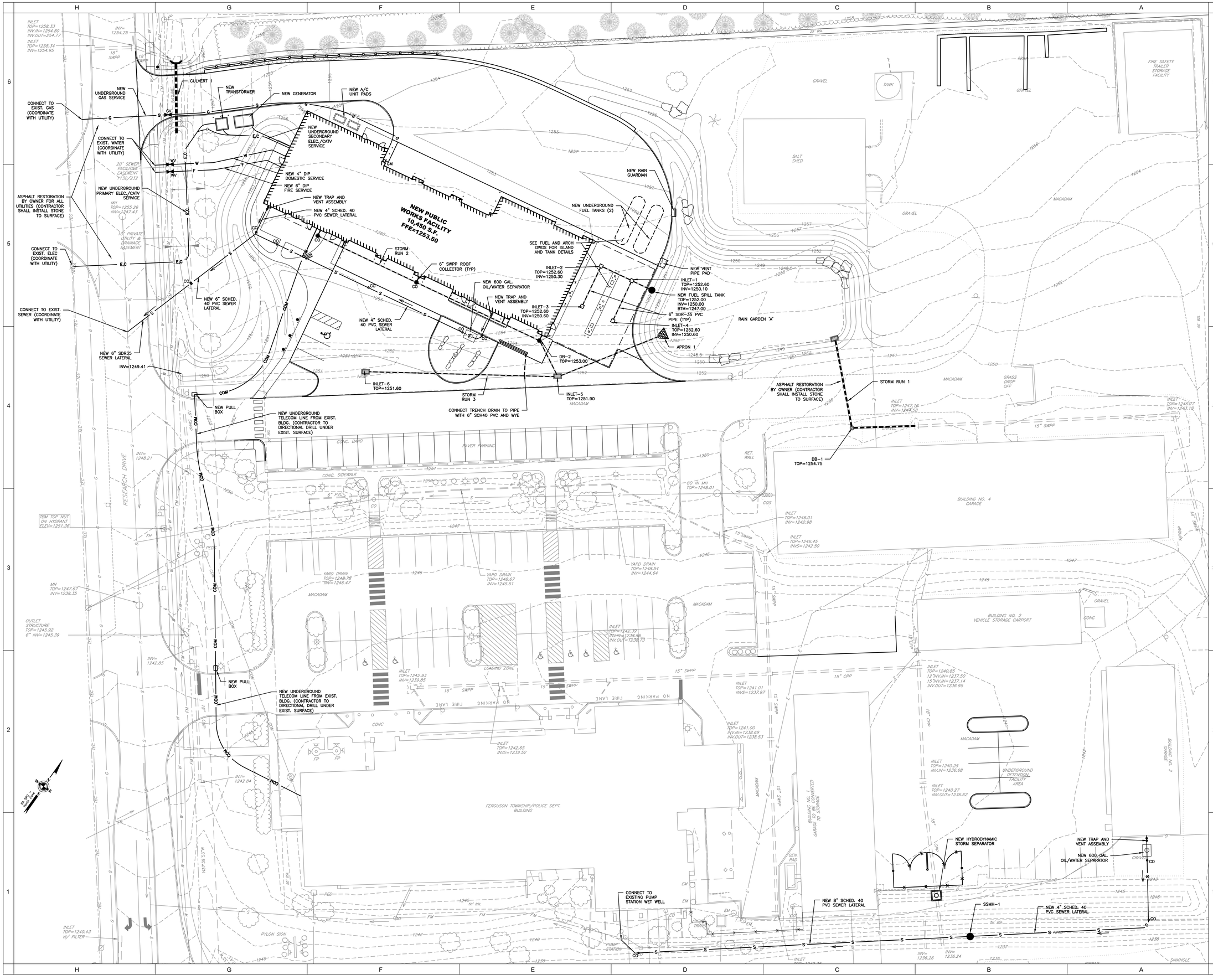

GREENFIELD ARCHITECTS LTD.

An Affiliate of High Real Estate Group LLC

1853 William Penn Way
P.O. Box 10008
Lancaster, PA 17605-0008
(717) 293-4475
FAX (717) 293-4499
www.greenfieldarchitects.net

GREENFIELD ARCHITECTS, LTD.
These plans are copyrighted and are subject to copyright protection as an "architectural work" under Section 102 of the Copyright Act, 17 U.S.C. as amended December 1990 and known as Architectural Copyright Protection Act of 1990. The protection includes but is not limited to the overall form as well as the arrangement and composition of spaces and elements of design. Under such protection, any unauthorized use of these plans, or work represented, can legally result in the penalties provided.

Any reproduction of this document in part or whole without the express written permission of Greenfield Architects, Ltd. is strictly prohibited.

KELLER ENGINEERS

CIVIL • STRUCTURAL • SURVEY
www.keller-engineers.com
3500 E. College Avenue,Suite 1100
State College, PA 16801
P:(814) 231-2925

KELLER ENGINEERS, INC. EXPRESSLY RESERVES ITS COMMON LAW COPYRIGHT AND OTHER PROPERTY RIGHTS IN THESE PLANS AND DESIGNS. THEY ARE NOT TO BE REPRODUCED, CHANGED, ALTERED OR COPIED IN ANY FORM OR MANNER, NOR ARE THEY TO BE ASSIGNED WITHOUT WRITTEN PERMISSION AND CONSENT OF KELLER ENGINEERS, INC.

FILE NAME: PLOT/07 UTILITY.DWG

SCALE: 1"=20' (20' 0' 20')

No.	Description	Date

FERGUSON PUBLIC WORKS BUILDING

FERGUSON TOWNSHIP

3147 RESEARCH DRIVE
STATE COLLEGE, PA 16801

Project Number	3809-1
Date	2/6/19
Drawn By	AJL
Checked By	BES

UTILITY PLAN

C-007

LANDSCAPING LEGEND

SYMBOL	KEY	QTY	BOTANICAL NAME COMMON NAME	SIZE	ROOT	MATURE HEIGHT	MATURE SPREAD
		6	FRUIT TREES REDHAVEN/ELBERTA PEACH (1 EA.) HONEYCRISP/STARK GOLD, DEL. APPLE (1 EA.) SUPERIOR/BUBBLEGUM PLUM (1 EA.)	2" CAL.	B&B	25' 20' 20'	25' 25' 20'
	CC	2	CERCIS CANADENSIS EASTERN REDBUD	2" CAL.	B&B	25'	25'
	CS	10	CORNUS SERICEA REDOSIER DOGWOOD	24" HT.	CONT.	9'	10'
	PF	20	POTENTILLA FRUTICOSA SHRUBBY CINQUEFOIL	6" HT.	CONT.	3'	4'
	RH	30	RUDBECKIA HIRTA PERENNIAL BLACK EYED SUSAN	18" HT.	CONT.	3'	2'
	EP	34	ECHINACEA PURPUREA PURPLE CONEFLOWER	18" HT.	CONT.	4'	2'
	LB	6	LINDERA BENZOIN SPICEBUSH	24" HT.	CONT.	8'	10'
	LX	26	LEUCANTHEMUM X SUPERBUM 'ALASKA' SHASTA DAISY (LARGE, SINGLE)	18" HT.	CONT.	3'	2'
	OC	16	OSMUNDA CINNAMOMEA CINNAMON FERN	18" HT.	CONT.	3'	3'
	PD	25	PANICUM VIRGATUM 'DALLAS BLUES' DALLAS BLUES SWITCHGRASS	24" HT.	CONT.	6'	3'
	EM	20	EUPATORIUM MACULATUM SPOTTED JOE PYE WEED	24" HT.	CONT.	6'	1.5'
	MD	18	MONARDA DIDYMA RED BEEBALM	18" HT.	CONT.	4'	3'
	PV	16	PANICUM VIRGATUM SWITCHGRASS	24" HT.	CONT.	6'	3'
	PS	13	PHLOX STOLONIFERA CREEPING PHLOX	6" HT.	CONT.	1'	1.5'
	LS	23	LIATRIS SPICATA BLAZING STAR	18" HT.	CONT.	4'	1.5'
	AN	37	ASTER NOVAE–ANGLIAE 'PURPLE DOME' PURPLE DOME NEW ENGLAND ASTER	12" HT.	CONT.	2'	2'
	AT	32	AESCLEPIAS TUBEROSA BUTTERFLYWEED	12" HT.	CONT.	2'	1.5'
	IG	21	ILEX GLABRA 'SHAMROCK' SHAMROCK INKBERRY	18" HT.	CONT.	4'	4'
			RAIN GARDEN GRASS MIX (ERNMX 180–1) DO NOT MOW AREAS AROUND SHRUBS; MOW OTHER BASIN AREAS A MAXIMUM OF 1 TIME PER MONTH.				

NOTES:
1. ALL LANDSCAPING TO BE BY OWNER UNLESS OTHERWISE NOTED.
2. NON–BIORETENTION PLANTING AREAS SHALL RECEIVE WEED BARRIER FABRIC AND 3" OF SHREDDED BARK MULCH (COLOR: CHOCOLATE).
3. ALL PLANT MATERIALS SHALL MEET THE SPECIFICATIONS OF THE AMERICAN ASSOCIATION OF NURSERYMEN FOR NO. 1 GRADE.
4. RAIN GARDEN MIX SHALL BE SEEDED AT 15 LBS. PER ACRE WITH A COVER CROP OF GRAIN RYE SEEDED AT 30 LBS. PER ACRE.
5. ALL TREES AND SHRUBS SHALL BE PLANTED IN ACCORDANCE WITH THE "GUIDE TO ARBOR WORK IN FERGUSON TOWNSHIP"
6. ALL PERVIOUS AREAS THAT DO NOT HAVE A SPECIALTY MIX SPECIFIED SHALL RECEIVE LAWN SEED MIX PER THE E&S NOTES SHEET.

REFORESTATION AREA:

SEEDING AND MULCHING: (BY CONTRACTOR)
TILL EXISTING AREA AND SEED AREA WITH ERNMX–153 FROM ERNST CONSERVATION SEEDS 1–800–873–3321.
SEED AT 20 LBS PER ACRE.

TREE PLANTINGS: (BY OWNER)
PROVIDE AND INSTALL 2" TALL SAPLINGS OF THE FOLLOWING VARIETIES AND QUANTITIES:

			HEIGHT	SPREAD
CLEDASTRIS KENTUKEA	(AMERICAN YELLOWWOOD)	QTY: 5	45'	50'
JUGLANS NIGRA	(BLACK WALNUT)	QTY: 5	50'	50'
QUERCUS MACROCARPA	(BUR OAK)	QTY: 5	70'	75'
PINUS STROBUS	(WHITE PINE)	QTY: 5	50'	30'

A 4' TRANSLUCENT, PHOTODEGRADABLE TREE TUBE SHALL BE INSTALLED AROUND EACH SAPLING. INSTALL TUBE ACCORDING TO MANUFACTURER RECOMMENDATIONS.

ALSO PLANT 2" CALIPER TREES OF THE FOLLOWING SPECIES. SEE PLAN FOR LOCATION.

			HEIGHT	SPREAD
CLEDASTRIS KENTUKEA	(AMERICAN YELLOWWOOD)	QTY: 5	45'	50'
QUERCUS MACROCARPA	(BUR OAK)	QTY: 5	70'	75'
PINUS STROBUS	(WHITE PINE)	QTY: 5	50'	30'

UNDERSTORY PLANTINGS: (BY OWNER)
PROVIDE AND INSTALL 2' BARE ROOT STOCK OF THE FOLLOWING VARIETIES AND QUANTITIES:

			HEIGHT	SPREAD
HAMAMELIS VIRGINIANA	(WITCH HAZEL)	QTY: 5	15'	20'
CRATAEGUS CRUS–GALLI	(COCKSPUR HAWTHORN)	QTY: 5	20'	20'
CERCIS CANADENSIS	(EASTERN REDBUD)	QTY: 5	25'	25'

PLANT SAPLINGS 5' APART (MIN.) IN A RANDOM, MIXED FASHION. SAPLINGS SHALL NOT BE CLOSER THAN 10' TO A WALKWAY, PAVEMENT, OR PIPE.

DO NOT PLANT SAPLINGS OVER UNDERGROUND UTILITY LINES OR UNDER OVERHEAD UTILITY LINES.

PLANT 70% OF STOCK IN REFORESTATION AREA 1 AND 30% OF STOCK IN REFORESTATION AREA 2.

QUERCUS MACROCARPA

PINUS STROBUS

CLEDASTRIS KENTUKEA

LANDSCAPE RESTORATION AREA:

SEEDING AND MULCHING: (BY CONTRACTOR)
KILL TURF GRASS IN RESTORATION AREAS BY SPRAYING WITH APPROVED HERBICIDE AND WAIT 1 MONTH. SPRAY AREAS WITH HERBICIDE AGAIN AND WAIT 1 MORE MONTH. TILL AREAS TO BREAK UP SURFACE AND SEED WITH MIX LISTED BELOW.

SEED AREA WITH ERNMX–153 FROM ERNST CONSERVATION SEEDS 1–800–873–3321. WWW.ERNSTSEED.COM
SEED AT 20 LB PER ACRE, OR 1/2 LB PER 1,000 SQ FT

BIOSWALE:

EXCAVATION, SEEDING AND MULCHING: (BY CONTRACTOR)
REPLACE SOIL AND SEED AREA WITH ERNMX–183 FROM ERNST CONSERVATION SEEDS 1–800–873–3321. WWW.ERNSTSEED.COM
SEED AT 20 LB PER ACRE, OR 1/2 LB PER 1,000 SQ FT

EXCAVATE/AMEND SOIL AS ILLUSTRATED IN THE DETAIL ON THE PCSM PLAN.

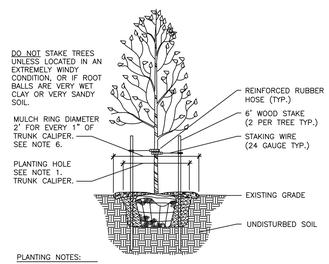

PLANTING NOTES:
1. EXCAVATE PLANTING HOLE TO A DEPTH NOT TO EXCEED THE DEPTH OF THE ROOT BALL. HOLE DIAMETER TWICE ROOT BALL WIDTH.
2. SET ROOT BALL AT, OR SLIGHTLY ABOVE FINISHED GRADE. COVER THE ROOT BALL WITH SOIL.
3. CUT TWINE, OR BURLAP, FROM AROUND TRUNK. CUT WIRE BASKET FROM THE TOP PORTION OF THE ROOT BALL (IF APPLICABLE).
4. BACKFILL WITH EXISTING SOIL. USE OF SOIL AMENDMENTS IS NOT RECOMMENDED.
5. TAMP SOIL AROUND ROOT BALL FIRMLY.
6. MULCH RING, WITH HAND CUT EDGE, SHALL BE PLACED AROUND EACH TREE, IF NOT LOCATED IN A MULCHED BED, PLACE 3" SHREDDED TANBARK MULCH IN RING, TAPER TO 0" AT TRUNK.
7. ONLY PRUNE DEAD, BROKEN, OR CROSSOVER LIMBS.

TREE PLANTING

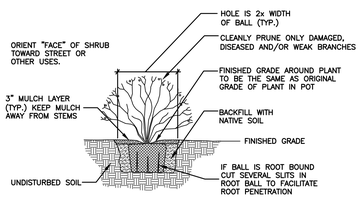

SHRUB PLANTING DETAIL

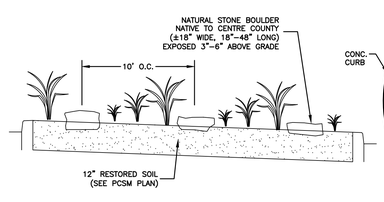

POLLINATOR GARDEN SCHEMATIC

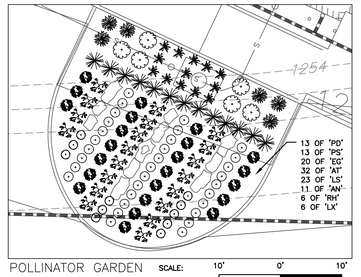

POLLINATOR GARDEN ENLARGEMENT SCALE: 1"=10' (10' 0' 10')

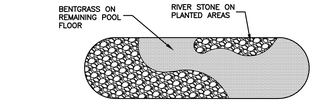

SCHEMATIC BIORETENTION PLAN (EXIST. RAIN GARDENS)

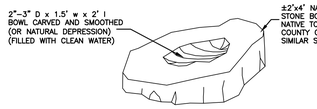

NATURAL STONE BIRDBATH

GREENFIELD ARCHITECTS LTD.
An Affiliate of High Real Estate Group LLC
1853 William Penn Way
P.O. Box 10008
Lancaster, PA 17605-0008
(717) 293-4475
FAX (717) 293-4499
www.greenfieldarchitects.net

GREENFIELD ARCHITECTS, LTD.
These plans are copyrighted and are subject to copyright protection as an "architectural work" under Section 102 of the Copyright Act, 17 U.S.O. as amended December 1990 and known as Architectural Copyright Protection Act of 1990. The protection includes but is not limited to the overall form as well as the arrangement and composition of spaces and elements of design. Under such protection, any unauthorized use of these plans, or work represented, can legally result in the penalties provided.

Any reproduction of this document in part or whole without the express written permission of Greenfield Architects, Ltd. is strictly prohibited.

KELLER ENGINEERS
CIVIL • STRUCTURAL • SURVEY
www.keller-engineers.com
3500 E. College Avenue,Suite 1100
State College, PA 16801
P:(814) 231-2925

KELLER ENGINEERS, INC. EXPRESSLY RESERVES ITS COMMON LAW COPYRIGHT AND OTHER RIGHTS CONTAINED IN THESE PLANS AND DESIGNS. THEY ARE NOT TO BE REPRODUCED, CHANGED, ALTERED OR COPIED IN ANY FORM OR MANNER, NOR ARE THEY TO BE ASSIGNED WITHOUT WRITTEN PERMISSION AND CONSENT OF KELLER ENGINEERS, INC.

FILE NAME: PLOT/08 LSCAPE.DWG

SCALE: 1"=30' (30' 0' 30')

No.	Description	Date

FERGUSON PUBLIC WORKS BUILDING

FERGUSON TOWNSHIP

3147 RESEARCH DRIVE
STATE COLLEGE, PA 16801

Project Number	3809-1
Date	2/6/19
Drawn By	AJL
Checked By	BES

PCSM LANDSCAPE PLAN

C-008

PROJECT DESCRIPTION/SITE CHARACTERISTICS
LAND USE PAST: AGRICULTURE PRESENT: MUNICIPAL GOVERNMENT PROPOSED: MUNICIPAL GOVERNMENT
RECEIVING WATERS: SLAB CABIN RUN, CWF, MF
GEOLOGY – NITTANY FORMATION – DOLOMITE

CONSTRUCTION NOTES
- ANY PROPOSED INFILTRATION BMP'S WILL BE PROTECTED FROM COMPACTION UNTIL SITE STABILIZATION IS ACHIEVED AS SHOWN ON THE CONSTRUCTION DRAWINGS.

SEQUENCE OF INSTALLATION OF PCSM BMP'S

RECYCLING & DISPOSAL OF WASTE MATERIALS
- UPON COMPLETION OF CONSTRUCTION THE OWNER IS RESPONSIBLE TO ASSURE WASTES THAT RESULT FROM NORMAL MAINTENANCE OF THE PCSM BMP'S ARE PROPERLY DISPOSED. LITTER AND TRASH THAT COULD ACCUMULATE IN DRAINAGE FACILITIES MUST BE REMOVED DURING MAINTENANCE AND PROPERLY DISPOSED ACCORDING TO DEP REGULATORY REQUIREMENTS, SEE BELOW. DEAD OR DYING VEGETATION OR GRASS CLIPPINGS MUST BE DISPOSED AT AN APPROVED YARD WASTE RECYCLING FACILITY. ACCUMULATED SEDIMENT THAT IS REMOVED DURING REPAIR AND MAINTENANCE MUST BE PLACED IN AN UPLAND LOCATION OR REMOVED FROM THE PROPERTY AND IMMEDIATELY STABILIZED WITH SEED AND MULCH.
- ALL WASTES SHALL BE REMOVED FROM THE SITE AND RECYCLED OR DISPOSED OF IN ACCORDANCE WITH THE DEPARTMENT'S SOLID WASTE MANAGEMENT REGULATIONS AT 25 PA. CODE 260.1 ET SEQ., 271.1, AND 287.1 ET. SEQ. NO BUILDING MATERIALS OR WASTES OR UNUSED BUILDING MATERIALS SHALL BE BURNED, BURIED, DUMPED, OR DISCHARGED AT THE SITE.

PCSM BMP SEQUENCE OF INSTALLATION:
NOTE: CRITICAL STAGE REQUIRING OVERSIGHT BY LICENSED PROFESSIONAL. IMPLEMENTATION OF SPECIFIC PCSM BMP'S MUST FOLLOW THE CONSTRUCTION DETAILS AND NOTES OUTLINED ON THE PCSM AND PCSM/LANDSCAPE DRAWINGS INCLUDED FOR THIS PROJECT.
1. WHEN ALL SURFACES TRIBUTARY TO THE PCSM BMP'S, RAIN GARDENS, BIO–SWALES, AND REFORESTATION/LANDSCAPE RESTORATION AREAS HAVE ACHIEVED PERMANENT VEGETATION, DEFINED AS THE ESTABLISHMENT OF A UNIFORM 70% VEGETATIVE COVER OF EROSION RESISTANT PERENNIAL SPECIES OR COVERED WITH AN ACCEPTABLE PERMANENT BMP; SUCH AS, PAVEMENT FOR STREETS AND SIDEWALKS, THE PCSM BMP'S CAN BE CONSTRUCTED ACCORDING TO THE FOLLOWING SEQUENCE:
2. IMPLEMENTATION OF REFORESTATION AND LANDSCAPE RESTORATION CAN BEGIN.
3. IN ORDER TO PROPERLY CONSTRUCT AND VEGETATIVELY STABILIZE THE PROPOSED NEW BIO–SWALE AND ENHANCED SWALES TO BE CONVERTED TO BIO–SWALES ALONG RESEARCH DRIVE, FLOW MUST BE DIVERTED AWAY BY INSTALLING A STACKED COMPOST FILTER SOCK BELOW THE DRIVEWAY CROSSING PIPE TO PUMP FLOW INTO THE PAVED ROAD CURB AND GUTTER. CONSTRUCTION OF THESE SWALES CAN NOW BEGIN.
4. EXCAVATE BMP'S (BIO SWALES & RAIN GARDENS) TO THE DEPTH NEEDED TO ADD THE SOIL PLANTING MEDIUM TO THE REQUIRED FINAL DEPTH. SCARIFY THE RAIN GARDEN FLOOR TO A MINIMUM DEPTH OF 18 INCHES AND AVOID COMPACTION OF THE BASIN FLOOR.
5. BACKFILL AREA WITH SOIL PLANTING MEDIUM. OVERFILLING OF SOIL IS RECOMMENDED TO ALLOW FOR SETTLEMENT. LIGHT HAND TAMPING IS ACCEPTABLE IF NECESSARY.
6. COMPLETE FINAL LEVELING TO ACHIEVE PROPOSED DESIGN ELEVATIONS LEAVING SPACE FOR UPPER COMPOST LAYER.
7. VEGETATE BMP AS SHOWN ON THE PLANS.
8. OUTFALL DEVICES; SUCH AS, PIPES AND RISERS, CAN NOW BE INSTALLED AND BECOME OPERATIONAL.
9. STABILIZE ALL SURROUNDING DISTURBED SOIL SURFACES BY SEEDING AND MULCHING.
10. UPON ACHIEVING STABILIZATION IN THE BIO–SWALES ALONG RESEARCH DRIVE, THE DIVERSION INTO THE ROAD SIDE CURB AND GUTTER CAN BE REMOVED.
11. ADDITIONAL SITE LANDSCAPE PLANTINGS CAN TAKE PLACE AT THIS TIME OR IN THE NEAR FUTURE.

PCSM BMP CONSTRUCTION NOTES:
NOTE: LICENSED PROFESSIONAL MUST OVERSEE IMPLEMENTATION OF ALL THE FOLLOWING STRUCTURAL BMP'S

RAIN GARDEN/BIO–RETENTION/BIOSWALE
1. CONSTRUCTION EQUIPMENT MUST NOT TRAVEL THROUGH THE PROPOSED RAIN GARDEN LOCATION DURING TOPSOIL STRIPPING AND SITE GRADING TO AVOID COMPACTION OF THIS FUTURE PCSM BMP.
2. SUB GRADE PREPARATION – EXISTING SUB–GRADE IN BIO–RETENTION AREAS SHALL NOT BE COMPACTED OR SUBJECTED TO EXCESSIVE TRAFFIC FROM CONSTRUCTION EQUIPMENT.
3. INITIAL EXCAVATION CAN BE PERFORMED DURING ROUGH SITE GRADING, BUT SHALL NOT BE CARRIED TO WITHIN ONE (1) FOOT OF THE FINAL BOTTOM ELEVATION. FINAL EXCAVATION SHOULD NOT TAKE PLACE UNTIL ALL DISTURBED SURFACE WITHIN THE DRAINAGE AREA TO THE BIO–RETENTION AREA HAS BEEN STABILIZED.
4. WHERE EROSION OF SUB GRADE HAS CAUSED ACCUMULATION OF FINE MATERIALS AND/OR SURFACE PONDING IN THE GRADED BOTTOM, THIS MATERIAL MUST BE REMOVED WITH LIGHT WEIGHT EQUIPMENT AND THE UNDERLYING SOILS SCARIFIED TO A MINIMUM DEPTH OF SIX (6) INCHES WITH A YORK RAKE OR BY A LIGHT TRACTOR.

THE BIO–RETENTION SOIL PLANTING MIX SHALL BE A UNIFORM MIX, FREE OF STONES, STUMPS, ROOTS, OR OTHER SIMILAR OBJECTS LARGER THAN TWO INCHES EXCLUDING MULCH – MUST NOT CONTAIN ARBITRARY FILL MATERIALS. NO OTHER MATERIALS OR SUBSTANCES SHALL BE MIXED OR DUMPED WITHIN THE BIO–RETENTION AREA THAT MAY BE HARMFUL TO PLANT GROWTH, OR PROVE A HINDRANCE TO THE PLANTING OR MAINTENANCE OPERATIONS. SEE BIORETENTION ("RAIN GARDEN") DETAIL FOR MORE DETAILED SPECIFICATIONS FOR THE SOIL PLANTING MEDIA.

INSTALLATION OF VEGETATION:
1. SOIL PLANTING MIX SHALL BE PLACED IMMEDIATELY AFTER APPROVAL OF SUB–GRADE PREPARATION/BED INSTALLATION
2. INSTALL PLANTING SOIL MIX IN 12–INCH MAXIMUM LIFTS AND LIGHTLY COMPACT (TAMP WITH BACKHOE BUCKET OR BY HAND). KEEP EQUIPMENT MOVEMENT OVER PLANTING SOIL TO A MINIMUM – DO NOT OVER COMPACT. INSTALL PLANTING SOIL TO GRADES INDICATED ON THE CONSTRUCTION DRAWINGS.
3. PLANT TREES AND SHRUBS ACCORDING TO SUPPLIERS RECOMMENDATIONS AND ONLY FROM MID–MARCH THROUGH THE END OF JUNE OR FROM MID–SEPTEMBER THROUGH MID–NOVEMBER. PROVIDE MINIMAL MULCH AROUND PLANTINGS.
4. APPLY SEED MIX TO RAIN GARDEN FLOOR AND SIDE WALLS PER MANUFACTURER'S RECOMMENDATIONS.
5. PROTECT BIO–RETENTION/RAIN GARDENS FROM SEDIMENT AT ALL TIMES DURING CONSTRUCTION. HAY BALES, DIVERSION BERMS, AND/OR OTHER APPROPRIATE MEASURES SHALL BE USED AT THE TOE OF SLOPES THAT ARE ADJACENT TO THE BIO–RETENTION/RAIN GARDEN TO PREVENT SEDIMENT FROM WASHING INTO THESE AREAS DURING SITE DEVELOPMENT.
6. WATER VEGETATION AT THE END OF EACH DAY FOR TWO WEEKS AFTER PLANTING IS COMPLETED.
7. CONTRACTOR SHOULD PROVIDE A ONE–YEAR 80% CARE AND REPLACEMENT WARRANTY FOR ALL PLANTING BEGINNING AFTER INSTALLATION OF ALL PLANTS.

LANDSCAPE RESTORATION:
LANDSCAPE RESTORATION IS PROPOSED TO CONVERT PREDEVELOPMENT IMPERVIOUS SURFACES OR MOWED LAWN INTO MEADOW BY RE–VEGETATING WITH APPROPRIATE NATIVE SPECIES.
1. PREPARE THE SITE BY ELIMINATING ALL EXISTING VEGETATION AND WEEDS BY APPROPRIATE USE OF HERBICIDE OR REPEATED TILLAGE TO DESTROY ROOTS.
2. VEGETATE THE SITE WITH PLANTS SPECIES AS SHOWN ON THE LANDSCAPE PLAN, PLANTING CAN TAKE PLACE FROM SPRING THAW THROUGH JUNE 30 OR FROM SEPTEMBER 1 THROUGH SOIL FREEZE–UP ('DORMANT SEEDING'). PLANTING IN JULY & AUGUST IS GENERALLY NOT RECOMMENDED DUE TO THE FREQUENCY OF DROUGHT DURING THIS TIME. SEEDING CAN BE ACCOMPLISHED BY A VARIETY OF METHODS: NO–TILL SEEDER FOR MULTI–ACRE PLANTING; BROADCAST SEEDER; HAND BROADCAST FOR SMALL AREAS OF ONE ACRE OR LESS. SEED QUALITY IS CRITICAL AND A SEED MIX SHOULD BE USED WITH A MINIMUM PERCENTAGE OF NON–SEED PLANT PARTS.

REFORESTATION:
REFORESTATION IS PROPOSED TO CONVERT/RESTORE DISTURBED AREAS BACK TO FUTURE FOREST WITH APPROPRIATE NATIVE SPECIES.
1. PREPARE THE SITE BY ELIMINATING ALL EXISTING VEGETATION AND WEEDS BY APPROPRIATE USE OF HERBICIDE OR REPEATED TILLAGE TO DESTROY ROOTS.
2. INSTALL 12" MINIMUM OF RESTORED SOIL ON THE AREA.
3. VEGETATE THE SITE WITH PLANT SPECIES AS SHOWN. PLANTING CAN TAKE PLACE FROM SPRING THAW THROUGH JUNE 30 OR FROM SEPTEMBER 1 THROUGH SOIL FREEZE–UP ('DORMANT SEEDING'). PLANTING IN JULY & AUGUST IS GENERALLY NOT RECOMMENDED DUE TO THE FREQUENCY OF DROUGHT DURING THIS TIME. SEEDING CAN BE ACCOMPLISHED BY A VARIETY OF METHODS: NO–TILL SEEDER FOR MULTI–ACRE PLANTING; BROADCAST SEEDER; HAND BROADCAST FOR SMALL AREAS OF ONE ACRE OR LESS. SEED QUALITY IS CRITICAL AND A SEED MIX SHOULD BE USED WITH A MINIMUM PERCENTAGE OF NON–SEED PLANT PARTS.
4. INSTALL TREE SEEDLINGS PER NURSERY RECOMMENDATIONS. INSTALL PHOTODEGRADABLE TREE TUBE AROUND TREE SEEDLINGS PER MANUFACTURER RECOMMENDATIONS. OWNER TO PLANT TREES PRIOR TO SEEDING BY CONTRACTOR.

BIO–SWALE:
AFTER SOIL REMOVAL, THE UNDERLYING SOIL IN SWALE/BASIN AREAS SHALL BE REPLACED AS SHOWN IN THE TYPICAL DETAIL IN ACCORDANCE WITH THE FOLLOWING:
1. SOIL AMENDMENT MEDIA SHALL CONSIST OF COMPOST AND/OR SAND AND SHALL BE MIXED/ADDED IN A RATIO OF 1 PART SOIL TO 1 PART AMENDMENT.
2. ON SITE SOILS WITH AN ORGANIC CONTENT OF AT LEAST 5 PERCENT CAN BE PROPERLY STOCKPILED (TO MAINTAIN ORGANIC CONTENT) AND REUSED.
3. PROCEDURE FOR REPLACING SOIL SHALL BE: CREATE UPSTREAM IMPOUNDMENT AREA WITH PUMPING, EXCAVATE EXISTING SOIL TO DEPTH SHOWN ON DETAIL, I ROTOTILL OR RIP THE SUBGRADE, NSTALL CHECK DAMS, REMOVE ROCKS, PLACE THE AMENDED SOIL.
4. SEEDING, MULCHING AND ANY PLANNED LANDSCAPING CAN NOW BE IMPLEMENTED.
5. ONCE STABILIZATION IS ACHIEVED, THE UPSTREAM IMPOUNDMENT AND PUMPING CAN BE REMOVED/TERMINATED. RESTORE SURFACE VEGETATION WITH SPECIALTY SEED MIX.

MAINTENANCE NOTES
REGULAR MAINTENANCE IS NEEDED INITIALLY AFTER CONSTRUCTION, AND CONTINUING INSPECTION AND MAINTENANCE IS REQUIRED TO ASSURE PROPER OPERATION OF ALL BMP'S. THE CONTRACTOR MUST MAINTAIN A WRITTEN REPORT ON THE PROJECT SITE DOCUMENTING EACH INSPECTION AND ALL REPAIR OR REPLACEMENTS AND MAINTENANCE ACTIVITIES DURING THE WARRANTY PERIOD. AFTER THE WARRANTY EXPIRES, THE OWNER WILL NEED TO ASSUME MAINTENANCE RESPONSIBILITIES.

SHOULD ROUTINE INSPECTION REVEAL THAT A PCSM BMP IS NOT FUNCTIONING AS DESIGNED, THE CONTRACTOR OR OWNER MUST IMMEDIATELY TAKE ACTION TO CORRECT THE PROBLEM. STRUCTURAL FAILURES SUCH AS, BROKEN OR CLOGGED PIPES CAN BE RESOLVED BY REPLACING AND REPAIRING THE BMP TO THE ORIGINAL DESIGN (SEE PCSM BMP MAINTENANCE GUIDELINES FOR THIS PROJECT'S SPECIFIC BMP'S SHOWN BELOW). SHOULD A PCSM BMP CONSTRUCTED TO THE ORIGINAL DESIGN SPECIFICATIONS FAIL TO FUNCTION, THE OWNER MUST IMMEDIATELY CONTACT A STORMWATER DESIGN ENGINEER/PROFESSIONAL TO EVALUATE THE PROBLEM AND RECOMMEND CORRECTIONS. ANY MODIFICATION PROPOSED TO ADDRESS THE PROBLEM MUST BE SUBMITTED TO THE CENTRE COUNTY CONSERVATION DISTRICT AND/OR DEP FOR REVIEW AND APPROVAL PRIOR TO INITIATING IMPLEMENTATION OF CORRECTIVE ACTIONS.

IN ACCORDANCE WITH PERMIT CONDITIONS, WHERE PCSM BMP'S ARE FOUND TO BE INOPERATIVE OR INEFFECTIVE DURING AN INSPECTION OR ANY OTHER TIME THE PERMITTEE BECOMES AWARE OF ANY INCIDENT CAUSING OR THREATENING POLLUTION AS DESCRIBED IN TITLE 25 PA CODE § 91.33, AS REQUIRED IN TITLE 25 PA CODE § 92A.41(B), THE PERMITTEE AND CO–PERMITTEE SHALL WITHIN 24 HOURS CONTACT THE DEPARTMENT OR AUTHORIZED COUNTY CONSERVATION DISTRICT BY PHONE OR PERSONAL CONTACT, FOLLOWED BY SUBMISSION OF A WRITTEN REPORT WITHIN FIVE (5) DAYS OF THE INITIAL CONTACT.

RAIN GARDEN/BIO–RETENTION/BIOSWALE
REGULAR MAINTENANCE IS NEEDED INITIALLY AFTER CONSTRUCTION AND CONTINUING INSPECTION AND MAINTENANCE IS REQUIRED TO ASSURE PROPER OPERATION OF THE BMP.
- UPON INITIAL COMPLETION OF CONSTRUCTION, INSPECT BASIN WEEKLY AND AFTER RUNOFF EVENTS. EVIDENCE OF EROSION, ACCUMULATED DEBRIS/SEDIMENT, AND FAILURE TO ESTABLISH A GOOD STAND OF VEGETATION IN THE BASIN MUST BE IMMEDIATELY ADDRESSED.
- ROUTINE INSPECTION WILL BE CONDUCTED AT LEAST QUARTERLY AND AFTER MAJOR RUNOFF EVENTS. AS FOLLOWS –
- INSPECT AND CLEAN THE INLETS AND PIPES LEADING TO THE BASIN.
- INSPECT THE BASIN VEGETATION AND RE–SEED ANY OBSERVED BARE SPOTS.
- EVIDENCE OF EROSION MUST BE IMMEDIATELY REPAIRED.
- ACCUMULATED SEDIMENT OR DEBRIS MUST BE REMOVED AND PROPERLY DISPOSED OF.
- INSPECT THE OUTLET STRUCTURES FOR EROSION, DAMAGE, AND STABILITY. REPAIR AS NEEDED.
- MOW AND TRIM VEGETATION TO ENSURE SAFETY, AESTHETICS, PROPER OPERATION, AND TO SUPPRESS INVASIVE VEGETATION AND WEEDS. MOW ONLY WHEN DRY TO AVOID RUTTING.
- SHOULD THE BASIN STILL HAVE PONDED WATER 3 DAYS AFTER A PRECIPITATION OR THAWING EVENT, FURTHER INVESTIGATION MUST BE CONDUCTED TO INSPECT FOR CLOGGED OUTFALL DEVICES, UNDERDRAINS, PIPES, OR SPILLWAYS AND REPAIR AS NEEDED.

REFORESTATION/RESTORATION AREAS
REGULAR MAINTENANCE IS NEEDED INITIALLY AFTER CONSTRUCTION AND CONTINUING INSPECTION AND MAINTENANCE IS REQUIRED TO ASSURE PROPER OPERATION OF THE BMP.
- IN YEAR ONE (1) WEEDS MUST BE CAREFULLY CONTROLLED BY MOWING BACK WHEN THEY REACH 12–INCHES IN HEIGHT. WEEDS SHOULD NOT BE SPRAYED WITH HERBICIDES SINCE THIS CAN KILL DESIRABLE PLANTS. INSUFFICIENT PLANT COVER MAY REQUIRE RE–SEEDING.
- UPON INITIAL COMPLETION OF CONSTRUCTION, INSPECT AREA WEEKLY AND AFTER RUNOFF EVENTS. EVIDENCE OF EROSION, ACCUMULATED DEBRIS/SEDIMENT, AND FAILURE TO ESTABLISH A GOOD STAND OF VEGETATION MUST BE IMMEDIATELY ADDRESSED.
- ROUTINE INSPECTION WILL BE CONDUCTED AT LEAST QUARTERLY AND AFTER MAJOR RUNOFF EVENTS. AS FOLLOWS –
- EVIDENCE OF EROSION MUST BE IMMEDIATELY REPAIRED.
- INSPECT AND CLEAN OUT DEBRIS/NESTS/DETRITUS FROM THE TREE TUBES.
- ENSURE TREE TUBES ARE IN CONTACT WITH SOIL.
- REMOVE INVASIVE SPECIES VIA STRING TRIMMER DOWN TO BARE SOIL (REPEAT AS NECESSARY UNTIL INVASIVE PLANT IS ELIMINATED). USE HERBICIDE FOR INVASIVE SPECIES REMOVAL ONLY WHEN NECESSARY.
- ONCE VEGETATION IS ESTABLISHED, MOWING SHOULD BE LIMITED TO 1 TIME PER YEAR, IF AT ALL.

BIOSWALE
- CONDUCT INSPECTIONS AT LEAST QUARTERLY AND AFTER RAINFALL EVENTS.
- INSPECT AND CORRECT
  – EVIDENCE OF EROSION
  – DAMAGED OR DYING VEGETATION
  – REMOVE ACCUMULATED DEBRIS
- PRESENCE OF STANDING WATER MAY REQUIRE REPAIR TO RESTORE DESIGN GRADES.
- MOW AND TRIM VEGETATION TO ENSURE SAFETY, AESTHETICS, PROPER OPERATION, AND TO SUPPRESS INVASIVE VEGETATION AND WEEDS. MOW ONLY WHEN DRY TO AVOID RUTTING.
- INSPECT FOR UNIFORMITY IN CROSS–SECTION AND LONGITUDINAL SLOPE, CORRECT AS NEEDED
- INSPECT SWALE INLET (CURB CUTS, PIPES, ETC.) AND OUTLET FOR SIGNS OF EROSION OR BLOCKAGE, CORRECT AS NEEDED.
- RESEED BARE AREAS; INSTALL APPROPRIATE EROSION CONTROL MEASURES WHEN NATIVE SOIL IS EXPOSED OR EROSION CHANNELS ARE FORMING.
- FOR SWALES WITH CHECK DAMS, INSPECT AND CORRECT CHECK DAMS WHEN SIGNS OF ALTERED WATER FLOW (CHANNELIZATION, OBSTRUCTIONS, EROSION, ETC.) ARE IDENTIFIED
- WATER DURING DRY PERIODS, FERTILIZE, AND APPLY PESTICIDE ONLY IF ABSOLUTELY NECESSARY

PROFESSIONAL CERTIFICATION:
UPON COMPLETION OF THE PROJECT AND SUBMISSION OF THE REQUIRED NOTICE OF TERMINATION (NOT) THE RECORD DRAWINGS SHALL INCLUDE THE FOLLOWING EXECUTED CERTIFICATION, WITH THE PROFESSIONAL'S SEAL:

"I, _____, DO HEREBY CERTIFY PURSUANT TO THE PENALTIES OF 18 PA.C.S.A. § 4904 TO THE BEST OF MY KNOWLEDGE, INFORMATION AND BELIEF, THAT THE ACCOMPANYING RECORD DRAWINGS ACCURATELY REFLECT THE AS–BUILT CONDITIONS, ARE TRUE AND CORRECT, AND ARE IN CONFORMANCE WITH CHAPTER 102 OF THE RULES AND REGULATIONS OF THE DEPARTMENT OF ENVIRONMENTAL PROTECTION AND THAT THE PROJECT SITE WAS CONSTRUCTED IN ACCORDANCE WITH THE APPROVED PCSM PLAN, ALL APPROVED PLAN CHANGES AND ACCEPTED CONSTRUCTION PRACTICES."

OWNERSHIP/OPERATION/MAINTENANCE:
THE TOWNSHIP OF FERGUSON IS THE OWNER OF THIS DEVELOPMENT, AND IT WILL BE RESPONSIBLE FOR THE DAY TO DAY OPERATION AND MAINTENANCE OF THE PERMANENT FACILITIES AND WILL BE ULTIMATELY RESPONSIBLE FOR LONG–TERM MAINTENANCE OF THE PERMANENT STORMWATER BMP'S. UPON COMPLETION OF CONSTRUCTION AND ESTABLISHMENT OF THE PERMANENT VEGETATION, THE BIO–RETENTION AREAS SHALL BE INSPECTED AND REPAIRED AS NEEDED ACCORDING TO THE ABOVE NOTES.

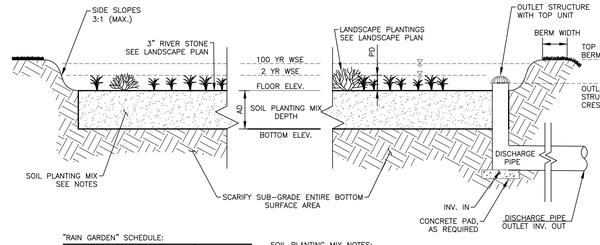

"RAIN GARDEN" SCHEDULE:

BIORETENTION AREA	A
TOP OF BERM	1251.35
BERM TOP WIDTH	5'
PONDING DEPTH (PD)	2' MAX.
SOIL PLANTING MIX DEPTH (AD)	2.0'
STONE DEPTH (SD)	0
OUTLET STRUCTURE TOP UNIT	GRATE
OUTLET STRUCTURE TYPE	TYPE M INLET
OUTLET STRUCTURE CREST ELEV.	1250.50
100 YR WATER SURFACE ELEV.	1250.49
2 YR WATER SURFACE ELEV.	1249.49
FLOOR ELEV.	1248.50
BOTTOM ELEV.	1246.50
UNDERDRAIN PIPE	N/A
INV. IN – UNDERDRAIN PIPE	N/A
INV. OUT – DISCHARGE PIPE	1246.50
DISCHARGE PIPE OUTLET INV.	1244.58
EMERG. SPILLWAY CREST (RISER)	N/A
EMERG. SPILLWAY LINING	N/A

SOIL PLANTING MIX NOTES:
1. SOIL PLANTING MIX TO GENERALLY CONSIST OF:
   A. 20% GOOD QUALITY TOPSOIL. UNSATISFACTORY TOPSOIL MATERIALS ARE DEFINED AS THOSE CONTAINING HIGH CLAY COMPOSITION, TRASH, DEBRIS, ROCKS, OR FROZEN MATERIAL. GOOD QUALITY TOPSOIL MAY OR MAY NOT BE AVAILABLE ON SITE.
   B. 30% GOOD QUALITY COMPOST. THE PURPOSE OF THE COMPOST COMPONENT IS TO INCREASE ORGANIC CONTENT OF THE SOIL PLANTING MIX MIXTURE TO PROMOTE PLANT MATERIAL GROWTH UPON THE BASIN BOTTOM. DO NOT USE BIO–SOLID COMPOST MIXTURE SOURCES; DO NOT USE COMPOST SOURCES WITH HIGH CLAY CONTENT OR PARTICULATES.
   C. 50% CLEAN WASHED SAND. THE PURPOSE OF THE SAND COMPONENT IS TO LOOSEN THE OVERALL SOIL PLANTING MIX MIX TO PROMOTE INFILTRATION.
   D. CLAY CONTENT OF THE BIO–RETENTION SOIL PLANTING MIX MUST BE LESS THAN 10%.
   E. THE PH OF THE BIO–RETENTION SOIL PLANTING MIX SHOULD BE BETWEEN 5.5 AND 7.5.
   F. LIME ANTI–FLOCCULATION AGENT AS DIRECTED BY PROJECT SOIL SCIENTIST.
   G. A 3" LAYER OF ¾" CLEAN WASHED ANTI–SKID MATERIAL MAY BE PLACED ON THE BOTTOMOF THE RAINGARDEN IN LIEU OF THE GEOTECHNICAL FABRIC.
2. FINAL SOIL PLANTING MIX MIXTURE COMPONENTS AND COMPOSITION SHALL BE DETERMINED BY PROJECT SOIL SCIENTIST BASED ON ON–SITE TEST MIXTURE PREPARATION AND INFILTRATION TESTING.
3. PROCURE, MIX, STORE, AND PLACE SOIL PLANTING MIX IN ACCORDANCE WITH POST CONSTRUCTION STORMWATER MANAGEMENT PLAN.
4. PLACE SOIL PLANTING MIX LOOSE IN 8" LIFTS ON BASIN SUBGRADE, STARTING AT LOWEST END OF BASIN. DO NOT PLACE SOIL PLANTING MIX IN STANDING WATER. DO NOT COMPACT. AVOID RUNNING EQUIPMENT ON COMPLETED BASIN BOTTOM.

BIORETENTION ("RAIN GARDEN")
WITH RISER OUTLET STRUCTURE

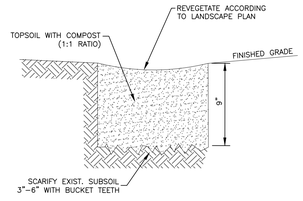

BIOSWALE DETAIL

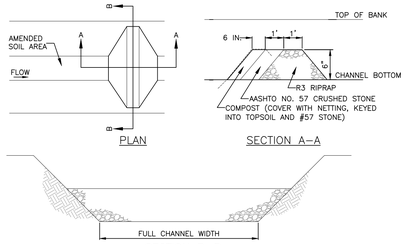

NOTE:
NETTING TO BE NYLON, 1" SQUARE MESH, COLOR BLACK OR BROWN.

CHECK DAM FOR BIOSWALES

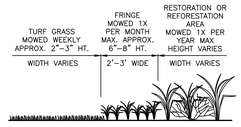

MOWING SCHEMATIC

NOTE:
A LICENSED PROFESSIONAL SHALL OVERSEE CONSTRUCTION OF ALL BMPS, INCLUDING PLACEMENT OF SOIL PLANTING MIXES.

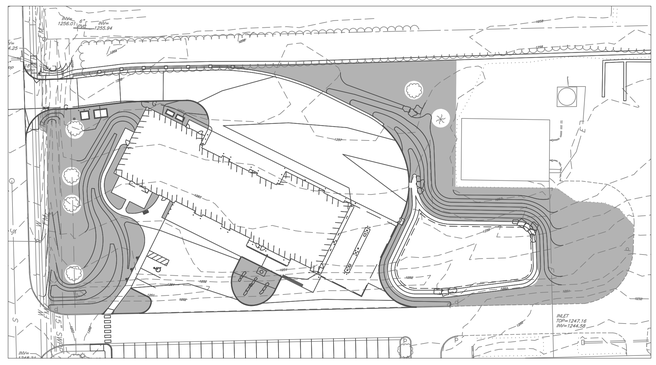

SOIL RESTORATION SCHEMATIC

NOTES:
1. GRAY SHADED AREAS TO RECEIVE SOIL RESTORATION. AREAS WITH NO GRADING SHOWN SHALL BE EXCAVATED TO THE 12" DEPTH AND AMENDED ACCORDING TO THE DETAIL.
2. CONTRACTOR MUST PROVIDE SOIL TESTS (MINIMUM OF 2) ILLUSTRATING THAT THE SOIL TO BE USED MEETS THE SPECIFIED CRITERIA IN THE DETAIL.
3. DO NOT EXCAVATE SOIL WITHIN THE DRIPLINE OF EXISTING TREES.

SCALE: 1"=50'
50' 0' 50'

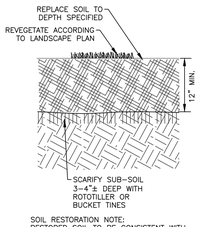

SOIL RESTORATION NOTE:
RESTORED SOIL TO BE CONSISTENT WITH SILT LOAM CLASSIFICATION FROM THE USDA TRIANGLE. RANGES OF PARTICLE SIZE DISTRIBUTION, AS DETERMINED BY PIPETTE METHOD IN COMPLIANCE WITH ASTM F–1632. SAND=20%–50%, SILT=75%–90%, CLAY=LESS THAN 5%.

SOIL RESTORATION DETAIL

GREENFIELD ARCHITECTS LTD.
An Affiliate of High Real Estate Group LLC
1853 William Penn Way
P.O. Box 10008
Lancaster, PA 17605-0008
(717) 293-4475
FAX (717) 293-4499
www.greenfieldarchitects.net

GREENFIELD ARCHITECTS, LTD.
These plans are copyrighted and are subject to copyright protection as an "architectural work" under Section 102 of the Copyright Act, 17 U.S.O. as amended December 1990 and known as Architectural Copyright Protection Act of 1990. The protection includes but is not limited to the overall form as well as the arrangement and composition of spaces and elements of design. Under such protection, any unauthorized use of these plans, or work represented, can legally result in the penalties provided.

Any reproduction of this document in part or whole without the express written permission of Greenfield Architects, Ltd. is strictly prohibited.

KELLER ENGINEERS
CIVIL • STRUCTURAL • SURVEY
www.keller-engineers.com
3500 E. College Avenue,Suite 1100
State College, PA 16801
P:(814) 231-2925

KELLER ENGINEERS, INC. EXPRESSLY RESERVES ITS COMMON LAW COPYRIGHT AND OTHER RIGHTS CONCERNING IN THESE PLANS AND DESIGNS. THEY ARE NOT TO BE REPRODUCED, CHANGED, ALTERED OR COPIED IN ANY FORM OR MANNER, NOR ARE THEY TO BE ASSIGNED WITHOUT WRITTEN PERMISSION AND CONSENT OF KELLER ENGINEERS, INC.

FILE NAME: PLOT/09–10 PCSM.DWG
SCALE: 1"=40' 40' 0' 40'

No.	Description	Date

FERGUSON PUBLIC WORKS BUILDING

FERGUSON TOWNSHIP

3147 RESEARCH DRIVE
STATE COLLEGE, PA 16801

Project Number	3809-1
Date	2/6/19
Drawn By	AJL
Checked By	BES

PCSM NOTES AND DETAILS

C-009

THERE ARE NO SOIL BOUNDARIES WITHIN THIS VIEW
HaB, HAGERSTOWN SILT LOAM SOIL UNDERLIES ENTIRE PROJECT AREA

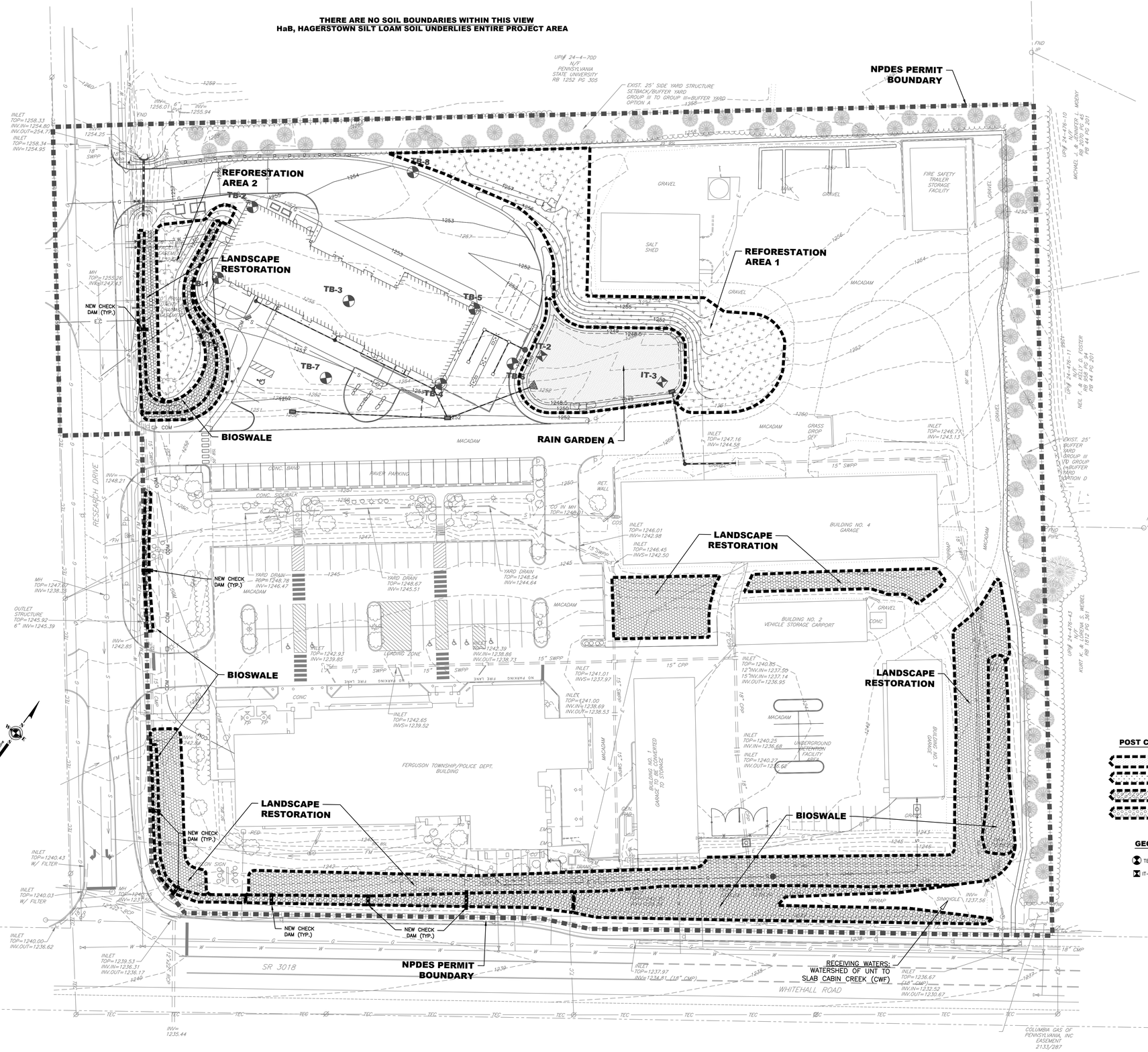

POST CONSTRUCTION BMP LEGEND

- RAINGARDEN
- REFORESTATION AREA
- BIOSWALE
- LANDSCAPE RESTORATION

GEOTECHNICAL LEGEND

- TB-2 TEST BORING
- IT-5 INFILTRATION TEST

GREENFIELD ARCHITECTS LTD.

An Affiliate of High Real Estate Group LLC

1853 William Penn Way
P.O. Box 10008
Lancaster, PA 17605-0008
(717) 293-4475
FAX (717) 293-4499
www.greenfieldarchitects.net

GREENFIELD ARCHITECTS, LTD.
These plans are copyrighted and are subject to copyright protection as an "architectural work" under Section 102 of the Copyright Act, 17 U.S.C. as amended December 1990 and known as Architectural Copyright Protection Act of 1990. The protection includes but is not limited to the overall form as well as the arrangement and composition of spaces and elements of design. Under such protection, any unauthorized use of these plans, or work represented, can legally result in the penalties provided.

Any reproduction of this document in part or whole without the express written permission of Greenfield Architects, Ltd. is strictly prohibited.

KELLER ENGINEERS

CIVIL • STRUCTURAL • SURVEY
www.keller-engineers.com
3500 E. College Avenue,Suite 1100
State College, PA 16801
P:(814) 231-2925

KELLER ENGINEERS, INC. EXPRESSLY RESERVES ITS COMMON LAW COPYRIGHT AND OTHER RIGHTS COVERING ALL THESE PLANS AND DESIGNS. THEY ARE NOT TO BE REPRODUCED, CHANGED, ALTERED OR COPIED IN ANY FORM OR MANNER, NOR ARE THEY TO BE ASSIGNED WITHOUT WRITTEN PERMISSION AND CONSENT OF KELLER ENGINEERS, INC.

FILE NAME: PLOT/09-10 PCSM.DWG

SCALE: 1"=30' — 30' 0' 30'

No.	Description	Date

FERGUSON PUBLIC WORKS BUILDING

FERGUSON TOWNSHIP

3147 RESEARCH DRIVE
STATE COLLEGE, PA 16801

Project Number	3809-1
Date	2/6/19
Drawn By	AJL
Checked By	BES

PCSM PLAN

C-010

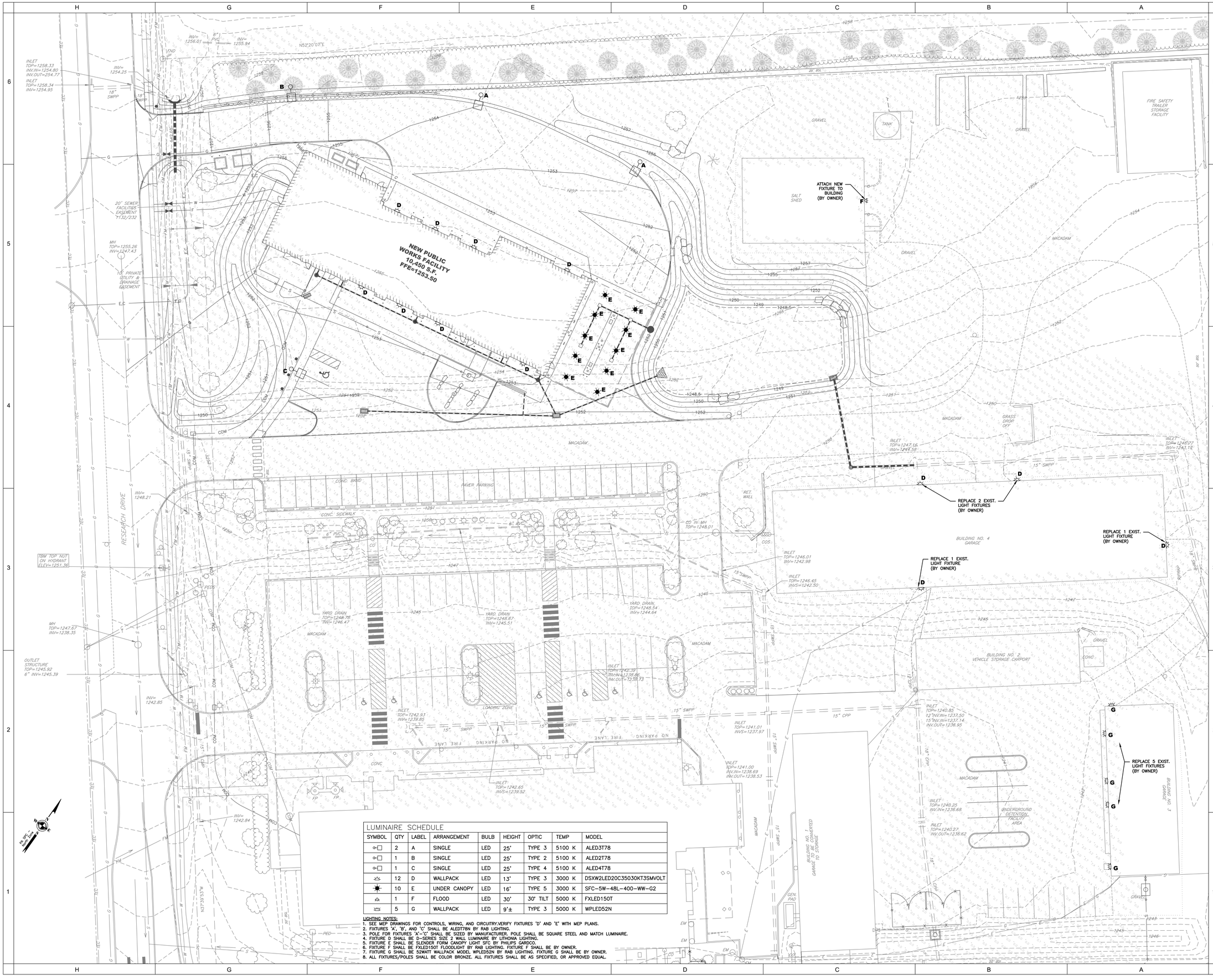

LUMINAIRE SCHEDULE								
SYMBOL	QTY	LABEL	ARRANGEMENT	BULB	HEIGHT	OPTIC	TEMP	MODEL
	2	A	SINGLE	LED	25'	TYPE 3	5100 K	ALED3T78
	1	B	SINGLE	LED	25'	TYPE 2	5100 K	ALED2T78
	1	C	SINGLE	LED	25'	TYPE 4	5100 K	ALED4T78
	12	D	WALLPACK	LED	13'	TYPE 3	3000 K	DSXW2LED20C35030KT3SMVOLT
	10	E	UNDER CANOPY	LED	16'	TYPE 5	3000 K	SFC-5W-48L-400-WW-G2
	1	F	FLOOD	LED	30'	30' TILT	5000 K	FXLED150T
	5	G	WALLPACK	LED	9'±	TYPE 3	5000 K	WPLED52N

LIGHTING NOTES:
1. SEE MEP DRAWINGS FOR CONTROLS, WIRING, AND CIRCUITRY.VERIFY FIXTURES 'D' AND 'E' WITH MEP PLANS.
2. FIXTURES 'A', 'B', AND 'C' SHALL BE ALED2T78N BY RAB LIGHTING.
3. POLE FOR FIXTURES 'A'-'C' SHALL BE SIZED BY MANUFACTURER. POLE SHALL BE SQUARE STEEL AND MATCH LUMINAIRE.
4. FIXTURE D SHALL BE D-SERIES SIZE 2 WALL LUMINAIRE BY LITHONIA LIGHTING.
5. FIXTURE E SHALL BE SLENDER FORM CANOPY LIGHT SFC BY PHILIPS CARDCO.
6. FIXTURE F SHALL BE FXLED150T FLOODLIGHT BY RAB LIGHTING. FIXTURE F SHALL BE BY OWNER.
7. FIXTURE G SHALL BE 52WATT WALLPACK MODEL WPLED52N BY RAB LIGHTING. FIXTURE G SHALL BE BY OWNER.
8. ALL FIXTURES/POLES SHALL BE COLOR BRONZE. ALL FIXTURES SHALL BE AS SPECIFIED, OR APPROVED EQUAL.

GREENFIELD ARCHITECTS LTD.

An Affiliate of High Real Estate Group LLC

1853 William Penn Way
P.O. Box 10008
Lancaster, PA 17605-0008
(717) 293-4475
FAX (717) 293-4499
www.greenfieldarchitects.net

GREENFIELD ARCHITECTS, LTD.
These plans are copyrighted and are subject to copyright protection as an "architectural work" under Section 102 of the Copyright Act, 17 U.S.O. as amended December 1990 and known as Architectural Copyright Protection Act of 1990. The protection includes but is not limited to the overall form as well as the arrangement and composition of spaces and elements of design. Under such protection, any unauthorized use of these plans, or work represented, can legally result in the penalties provided.

Any reproduction of this document in part or whole without the express written permission of Greenfield Architects, Ltd. is strictly prohibited.

KELLER ENGINEERS

CIVIL • STRUCTURAL • SURVEY
www.keller-engineers.com

3500 E. College Avenue,Suite 1100
State College, PA 16801
P:(814) 231-2925

KELLER ENGINEERS, INC. EXPRESSLY RESERVES ITS COMMON LAW COPYRIGHT AND OTHER RIGHTS CONTAINED IN THESE PLANS AND DESIGNS. THEY ARE NOT TO BE REPRODUCED, CHANGED, ALTERED OR COPIED IN ANY FORM OR MANNER, NOR ARE THEY TO BE ASSIGNED WITHOUT WRITTEN PERMISSION AND CONSENT OF KELLER ENGINEERS, INC.

FILE NAME: PLOT/11 LIGHTING.DWG

SCALE: 1"=30' (30' 0' 30')

No.	Description	Date

FERGUSON PUBLIC WORKS BUILDING

FERGUSON TOWNSHIP

3147 RESEARCH DRIVE
STATE COLLEGE, PA 16801

Project Number	3809-1
Date	2/6/19
Drawn By	AJL
Checked By	BES

LIGHTING PLAN

C-011

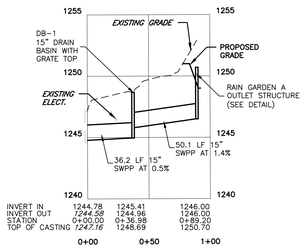

STORM RUN 1

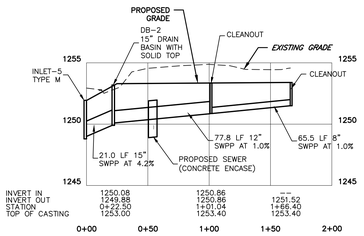

STORM RUN 2

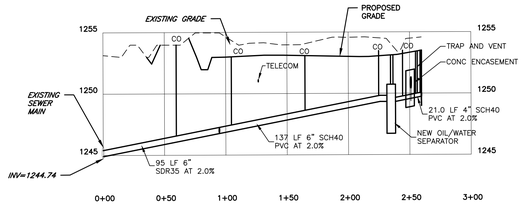

PW FACILITY SEWER LATERAL

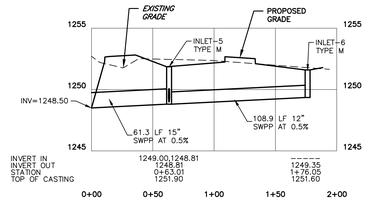

CULVERT 1

STORM RUN 3

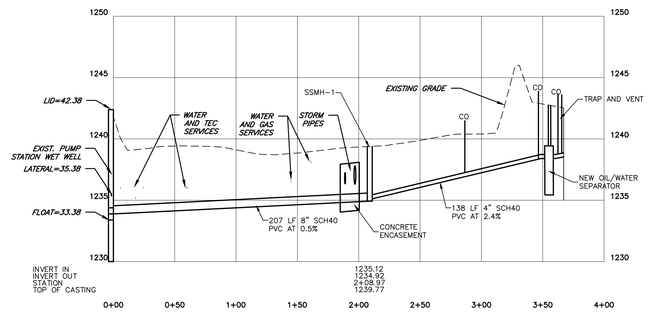

BUILDING 3 SEWER LATERAL

50' 0' 50' HORIZONTAL
10' 0' 10' VERTICAL

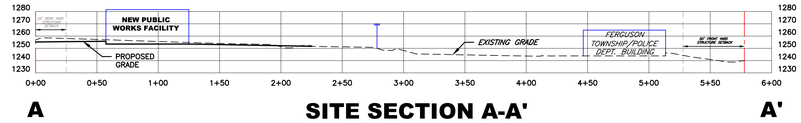

A — **SITE SECTION A-A'** — A'

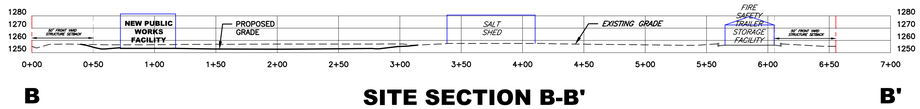

B — **SITE SECTION B-B'** — B'

50' 0' 50' HORIZONTAL
50' 0' 50' VERTICAL

GREENFIELD ARCHITECTS LTD.

An Affiliate of High Real Estate Group LLC

1853 William Penn Way
P.O. Box 10008
Lancaster, PA 17605-0008
(717) 293-4475
FAX (717) 293-4499
www.greenfieldarchitects.net

GREENFIELD ARCHITECTS, LTD.
These plans are copyrighted and are subject to copyright protection as an "architectural work" under Section 102 of the Copyright Act, 17 U.S.O. as amended December 1990 and known as Architectural Copyright Protection Act of 1990. The protection includes but is not limited to the overall form as well as the arrangement and composition of spaces and elements of design. Under such protection, any unauthorized use of these plans, or work represented, can legally result in the penalties provided.

Any reproduction of this document in part or whole without the express written permission of Greenfield Architects, Ltd. is strictly prohibited.

KELLER ENGINEERS

CIVIL • STRUCTURAL • SURVEY
www.keller-engineers.com
3500 E. College Avenue,Suite 1100
State College, PA 16801
P:(814) 231-2925

KELLER ENGINEERS, INC. EXPRESSLY RESERVES ITS COMMON LAW COPYRIGHT AND OTHER PROPERTY RIGHTS IN THESE PLANS AND DRAWING. THEY ARE NOT TO BE REPRODUCED, CHANGED, ALTERED OR COPIED IN ANY FORM OR MANNER, NOR ARE THEY TO BE ASSIGNED WITHOUT WRITTEN PERMISSION AND CONSENT OF KELLER ENGINEERS, INC.

FILE NAME: PLOT/12 PROFILES.DWG

No.	Description	Date

FERGUSON PUBLIC WORKS BUILDING

FERGUSON TOWNSHIP

3147 RESEARCH DRIVE
STATE COLLEGE, PA 16801

Project Number	3809-1
Date	2/6/19
Drawn By	AJL
Checked By	BES

PROFILES

C-012

NOTE:

CONTRACTION JOINTS SHALL BE PLACED EVERY 10' MAXIMUM, 4' MINIMUM. 3/4" PREMOLDED EXPANSION JOINT MATERIAL SHALL BE CUT TO CONFORM TO THE CROSS SECTIONAL AREA AND BE PLACED AT STRUCTURES AND AT THE END OF THE DAYS WORK.

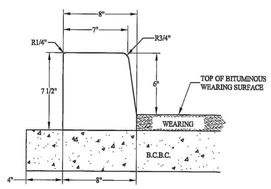

SECTION DETAIL

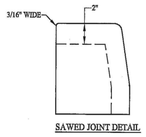

SAWED JOINT DETAIL

EXTRUDED CONCRETE CURB

STOP SIGN
(R1-1)
24"x24"

12"x18"
SIGN 'A'
RESERVED PARKING SIGN

NOTE: ACCESSIBLE PARKING = VAN ACCESSIBLE COMPLYING WITH ADAAG 4.30

RESERVED PARKING SIGN
VAN ACCESSIBLE SIGN
RESERVED PARKING PENALTIES
(R7-8)
12"x18"
(R7-8P)
12"x6"
(R7-8F)
12"x18"

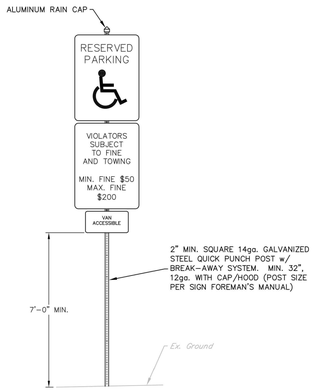

SIGN POST

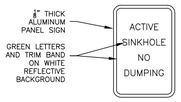

SINKHOLE SIGN
12"x18"

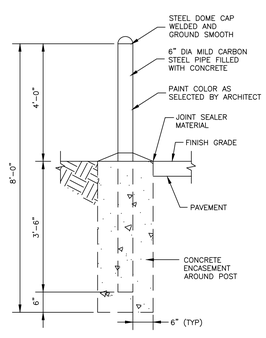

TRANSFORMER BOLLARD

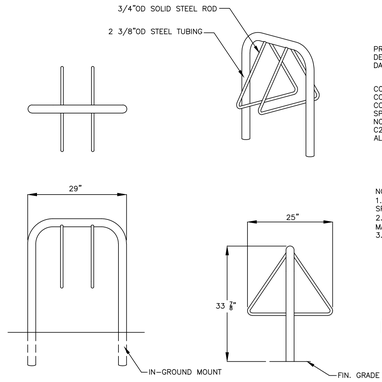

BIKE RACK 'A'

PRODUCT: TRI-5-IG
DESCRIPTION: TRITON BIKE RACK 5 BIKE, INGROUND
DATE: 8-11-16 ENG: SMC

CONFIDENTIAL DRAWING AND INFORMATION IS NOT TO BE COPIED OR DISCLOSED TO OTHERS WITHOUT THE CONSENT OF GRABER MANUFACTURING, INC. SPECIFICATIONS ARE SUBJECT TO CHANGE WITHOUT NOTICE.
©2016 GRABER MANUFACTURING, INC.
ALL PROPRIETARY RIGHTS RESERVED.

NOTES:
1. INSTALL BIKE RACKS ACCORDING TO MANUFACTURER'S SPECIFICATIONS.
2. CONSULTANT TO SELECT COLOR(FINISH), SEE MANUFACTURER'S SPECIFICATIONS.
3. SEE SITE PLAN FOR LOCATION OR CONSULT OWNER.

MADRAX

MADRAX DIVISION
GRABER MANUFACTURING, INC.
1080 UNIEK DRIVE WAUNAKEE, WI 53597
P(800) 448-7931, P(608) 849-1080,
F(608) 849-1081 WWW.MADRAX.COM,
E-MAIL: SALES@MADRAX.COM

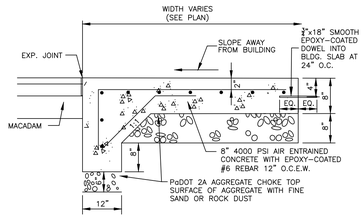

NOTE:
1. PROVIDE 1/4"x1" TOOLED CONTROL JOINT (CJ) WITH 1/4" RADIUS AT SPACING SHOWN ON PLANS.
2. PROVIDE 1/2" PREMOLDED EXPANSION JOINT (EJ) WITH SEALANT WHERE NEW WALK ABUTS BUILDING AND EXISTING WALK AND AT OTHER LOCATIONS WHERE NOTED ON SITE PLAN.

CONCRETE SLAB

CONCRETE PAVEMENT

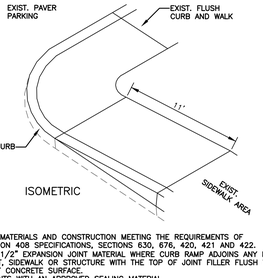

ISOMETRIC

NOTES:
1. PROVIDE MATERIALS AND CONSTRUCTION MEETING THE REQUIREMENTS OF PUBLICATION 408 SPECIFICATIONS, SECTIONS 630, 676, 420, 421 AND 422.
2. PROVIDE 1/2" EXPANSION JOINT MATERIAL WHERE CURB RAMP ADJOINS ANY RIGID PAVEMENT, SIDEWALK OR STRUCTURE WITH THE TOP OF JOINT FILLER FLUSH WITH ADJACENT CONCRETE SURFACE.
3. SEAL JOINTS WITH AN APPROVED SEALING MATERIAL.
4. PROVIDE SLIP RESISTANT TEXTURE ON CURB RAMP BY LIGHT BROOMING TRANSVERSE TO THE SLOPE OF THE RAMP. EXTEND TEXTURE THE FULL WIDTH AND LENGTH OF THE CURB RAMP INCLUDING FLARED SIDE RAMPS.
5. WHENEVER POSSIBLE, CONSTRUCT THE TRANSITION SLOPE FROM THE CURB RAMP AND FLARE SIDES TO ADJOINING SURFACES WITH A GRADUAL CURVE RATHER THAN AN ABRUPT ANGLE.

HANDICAPPED ACCESSIBLE DROP CURB 'A'

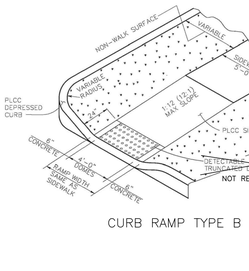

CURB RAMP TYPE B

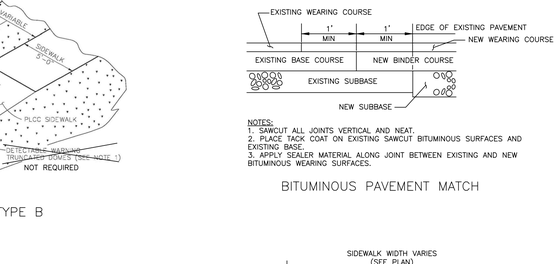

NOTES:
1. SAWCUT ALL JOINTS VERTICAL AND NEAT.
2. PLACE TACK COAT ON EXISTING SAWCUT BITUMINOUS SURFACES AND EXISTING BASE.
3. APPLY SEALER MATERIAL ALONG JOINT BETWEEN EXISTING AND NEW BITUMINOUS WEARING SURFACES.

BITUMINOUS PAVEMENT MATCH

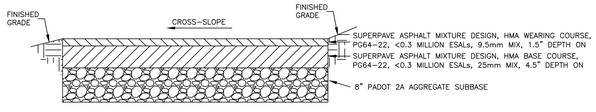

BITUMINOUS ASPHALT PAVEMENT

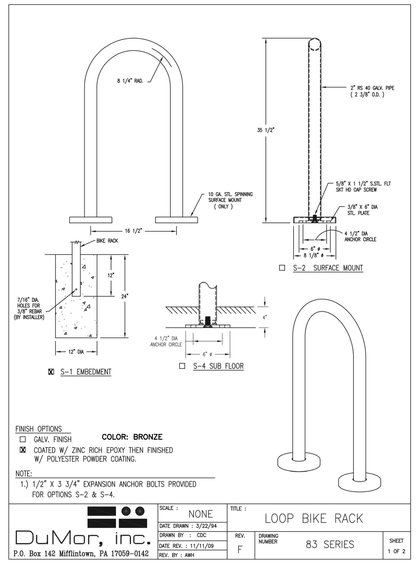

DuMor, inc.	SCALE : NONE	TITLE : LOOP BIKE RACK	
P.O. Box 142 Mifflintown, PA 17059-0142	DATE DRAWN : 3/22/94	DRAWN BY : CDC	REV. F
	DATE REV. : 11/11/09	REV. BY : AMH	DRAWING NUMBER 83 SERIES
			SHEET 1 OF 2

BIKE RACK 'B'

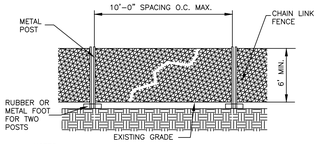

NOTES:
1. PLACE TREE PROTECTION AT DRIPLINE OF EXISTING TREES OR AREA TO PROTECT..
2. EARTHWORK FILL, VEHICULAR TRAFFIC, AND MATERIAL STORAGE SHALL BE PROHIBITED INSIDE THE PROTECTION FENCE.
3. REMOVE FENCE WHEN PROJECT IS COMPLETED. RESTORE EXISTING CONDITIONS AS NEEDED.

TEMPORARY PROTECTION FENCE

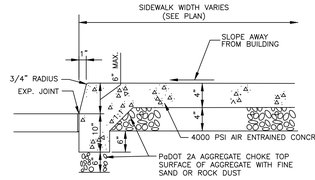

NOTE:
1. PROVIDE 1/4"x1" TOOLED CONTROL JOINT (CJ) WITH 1/4" RADIUS AT 6'-0" SPACING UNLESS OTHERWISE NOTED. PROVIDE 1/2" PREMOLDED EXPANSION JOINT (EJ) WITH SEALANT WHERE NEW WALK ABUTS WITH BUILDING AND EXISTING WALK AND AT OTHER LOCATIONS WHERE NOTED ON SITE PLAN.

MONOLITHIC CURB AND SIDEWALK SECTION

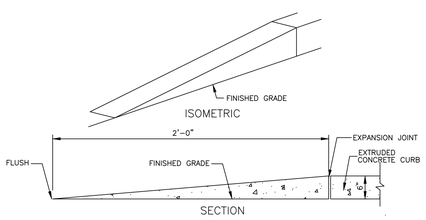

VERTICAL CURB TAPER

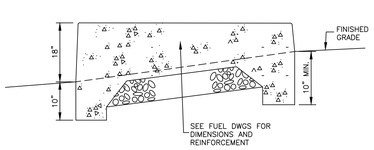

VENT PIPE PAD SCHEMATIC

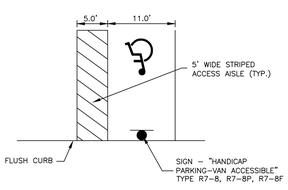

ACCESSIBLE PARKING

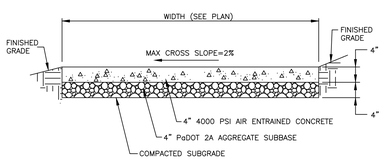

NOTES:
1. CONSTRUCT IN ACCORDANCE WITH SECTION 676 OF PaDOT PUBLICATION 408 SPECIFICATIONS, CURRENT EDITION
2. RUNNING SLOPE OF CONCRETE WALKS SHALL NOT EXCEED 5.0%.
3. CROSS SLOPE OF CONCRETE WALKS SHALL NOT EXCEED 2.0%.

CONCRETE WALK

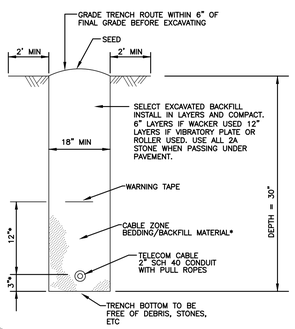

NOTES:
1. TRENCH WALLS TO BE VERTICAL TO A DEPTH OF AT LEAST 12" ABOVE TOP OF CABLE.
2. TRENCH EXCAVATION, CABLE BEDDING, CONDUIT/ROPES, AND TRENCH BACKFILL BY CONTRACTOR; CABLE INSTALLATION BY UTILITIES.
3. ALL SIGNIFICANT BENDS TO BE ACCOMPLISHED BY INSTALLING LONG RADIUS ELBOWS (36" MIN RADIUS).
4. * AT OPTION OF UTILITY OPERATING FOREMAN, BED CABLE IN 3" OF SAND OR SCREENED TOPSOIL, AND PROVIDE A 12" BACKFILL OF THE SAME MATERIAL.
-OR-
BACKFILL ENTIRE TRENCH WITH SELECT EXCAVATED BACKFILL MATERIAL.
5. THE CABLE ZONE BEDDING/BACKFILL MATERIAL MUST BE WELL TAMPED.

TELECOM/FIBER OPTIC TRENCH

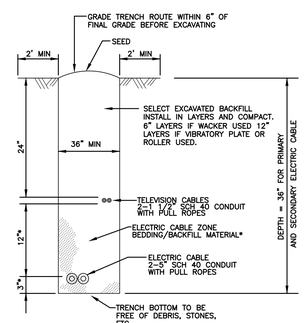

NOTES:
1. TRENCH WALLS TO BE VERTICAL TO A DEPTH OF AT LEAST 12" ABOVE TOP OF TELEPHONE CABLE.
2. TRENCH EXCAVATION, CABLE BEDDING, AND TRENCH BACKFILL BY CONTRACTOR CABLE INSTALLATION BY UTILITIES.
3. ALL SIGNIFICANT BENDS TO BE ACCOMPLISHED BY INSTALLING LONG RADIUS ELBOWS (36" MIN RADIUS).
4. * AT OPTION OF UTILITY OPERATING FOREMAN, BED CABLE IN 3" OF SAND OR SCREENED TOPSOIL, AND PROVIDE A 12" BACKFILL OF THE SAME MATERIAL.
-OR-
BACKFILL ENTIRE TRENCH WITH SELECT EXCAVATED BACKFILL MATERIAL.
5. THE ELECTRIC CABLE ZONE BEDDING/BACKFILL MATERIAL MUST BE WELL TAMPED.

ELECTRIC/TELEVISION CABLE JOINT TRENCH

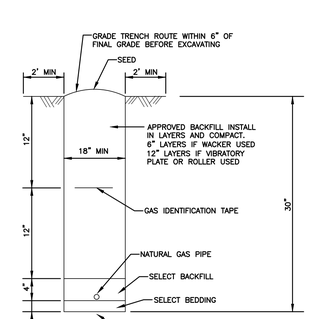

NOTES:
1. MINIMUM WIDTH FOR MAIN TRENCH SHALL BE 18".
2. BOTTOM OF TRENCH AND FIRST 6" OF BACKFILL SHALL BE FREE OF ROCK, CINDERS AND SHARP OBJECTS.
3. USE NATIVE BACKFILL MATERIAL WHENEVER POSSIBLE, OTHERWISE, USE GRADED SAND OR LIMESTONE SAND.
4. BACKFILL MATERIAL TO BE TAMPED TO AVOID SETTLING.
5. CUSTOMER MUST CONTACT COMPANY FOR METER LOCATION.
6. CUSTOMER IS RESPONSIBLE FOR ALL TRENCHING AND BACKFILLING.
7. THE TRENCH IS TO BE EXCAVATED IN THE LOCATION INDICATED BY GAS COMPANY.
8. CONTACT THE GAS COMPANY AT LEAST ONE WEEK BEFORE EXCAVATING.
9. DO NOT DIG BEFORE COORDINATING THE JOB WITH THE GAS COMPANY.
10. ALL CUSTOMER WORK MUST BE COMPLETED AND ALL REQUIRED INSPECTIONS BE OBTAINED BEFORE GAS COMPANY WILL CONNECT SERVICE.

NATURAL GAS PIPE TRENCH

GREENFIELD ARCHITECTS LTD.
An Affiliate of High Real Estate Group LLC
1853 William Penn Way
P.O. Box 10008
Lancaster, PA 17605-0008
(717) 293-4475
FAX (717) 293-4499
www.greenfieldarchitects.net

GREENFIELD ARCHITECTS, LTD.
These plans are copyrighted and are subject to copyright protection as an "architectural work" under Section 102 of the Copyright Act, 17 U.S.O. as amended December 1990 and known as Architectural Copyright Protection Act of 1990. The protection includes but is not limited to the overall form as well as the arrangement and composition of spaces and elements of design. Under such protection, any unauthorized use of these plans, or work represented, can legally result in the penalties provided.

Any reproduction of this document in part or whole without the express written permission of Greenfield Architects, Ltd. is strictly prohibited.

KELLER ENGINEERS
CIVIL • STRUCTURAL • SURVEY
www.keller-engineers.com
3500 E. College Avenue,Suite 1100
State College, PA 16801
P:(814) 231-2925

KELLER ENGINEERS, INC. EXPRESSLY RESERVES ITS COMMON LAW COPYRIGHT AND OTHER RIGHTS CONTAINED IN THESE PLANS AND DESIGNS. THEY ARE NOT TO BE REPRODUCED, CHANGED, ALTERED OR COPIED IN ANY FORM OR MANNER, NOR ARE THEY TO BE ASSIGNED WITHOUT WRITTEN PERMISSION AND CONSENT OF KELLER ENGINEERS, INC.

FILE NAME: PLOT/13-15 DETAILS.DWG

No.	Description	Date

FERGUSON PUBLIC WORKS BUILDING

FERGUSON TOWNSHIP

3147 RESEARCH DRIVE
STATE COLLEGE, PA 16801

Project Number	3809-1
Date	2/6/19
Drawn By	AJL
Checked By	BES

DETAILS

C-013

PIPE DIA	A	B MAX	H	L	W
12" & 15"	6.50"	10"	6.50"	25"	29"
18"	7.50"	15"	6.50"	32"	35"
24"	7.50"	18"	6.50"	36"	45"
30"	10.50"	NA	7.00"	53"	68"
36"	10.50"	NA	7.00"	53"	68"

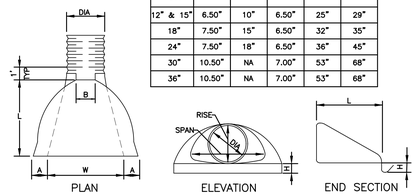

PLAN ELEVATION END SECTION

NOTES
INSTALL END SECTIONS ON ALL PIPES THAT DISCHARGE TO GRADE.

POLYETHYLENE PIPE END SECTION

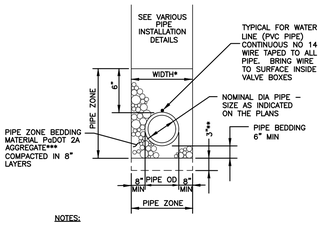

NOTES:

1. TRENCH WALLS TO BE VERTICAL TO A DEPTH OF AT LEAST 12" ABOVE TOP OF PIPE.
2. * WIDTH DETERMINED BY PIPE INSTALLATION APPLICATION.
3. ** OVER-EXCAVATE TRENCH ADDITIONAL 3" IF ROCK, HARD SHALE, OR UN-YIELDING MATERIAL ENCOUNTERED BACKFILL WITH SPECIFIED BEDDING MATERIAL.
4. *** USE 2B FOR PERFORATED PIPE

PIPE BEDDING

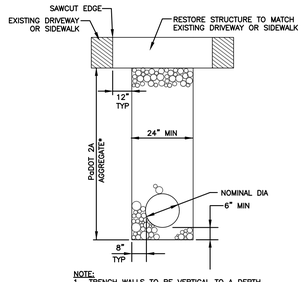

NOTE:

1. TRENCH WALLS TO BE VERTICAL TO A DEPTH OF AT LEAST 12" ABOVE TOP OF PIPE
2. * USE 2B AGGREGATE FOR PERFORATED PIPE

PIPE INSTALLATION DRIVEWAY AND SIDEWALK

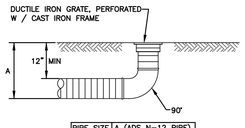

PIPE SIZE	A (ADS N-12 PIPE)
4"	17.00"
6"	19.00"
8"	21.00"
10"	24.00"
12"	26.00"
15"	29.00"

ADS INLINE DRAIN
OR EQUIVALVENT

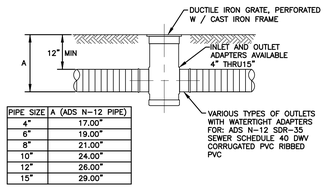

PIPE SIZE	A (ADS N-12 PIPE)
4"	17.00"
6"	19.00"
8"	21.00"
10"	24.00"
12"	26.00"
15"	29.00"

ADS DRAIN BASIN
OR EQUIVALVENT

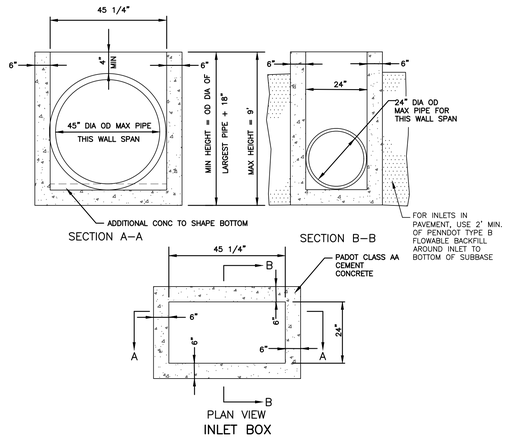

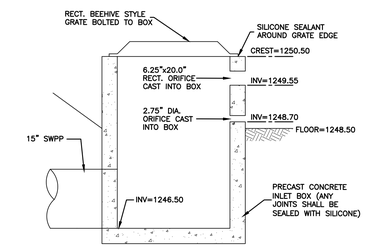

OUTLET STRUCTURE RAIN GARDEN 'A'

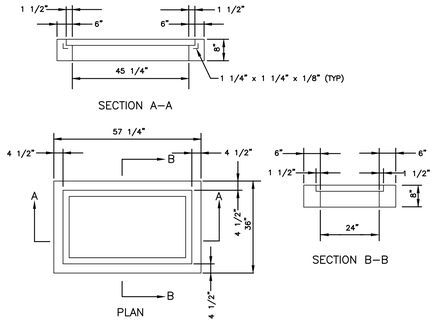

TYPE M INLET TOP

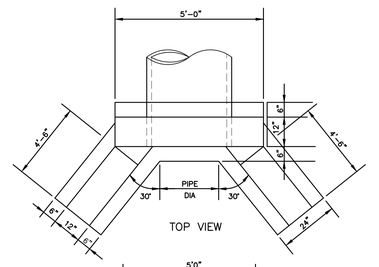

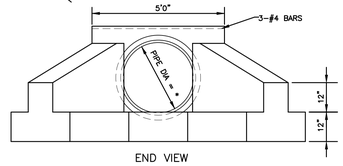

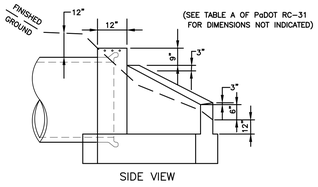

TYPE D–W ENDWALL

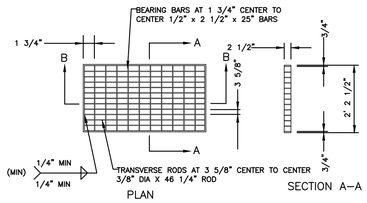

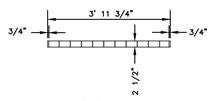

NOTE:
STRUCTURAL STEEL GRATE BICYCLE SAFE AS PER PADOT RC-34.

STRUCTURAL STEEL INLET GRATE (BICYCLE SAFE)

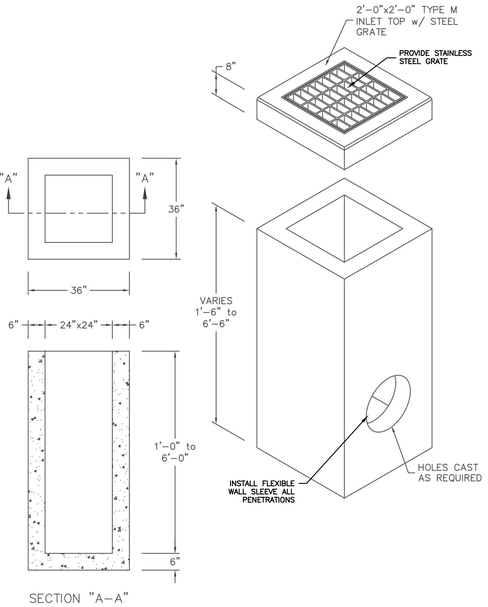

NOTE:
1. PRODUCT TO BE BY MONARCH PRECAST, WWW.MONARCHPRECAST.COM, OR APPROVED EQUAL.

2'X2' CONCRETE INLET BOX

Rinker MATERIALS™ — Concrete Pipe Division

STC 900 Precast Concrete Stormceptor® (900 U.S. Gallon Capacity)

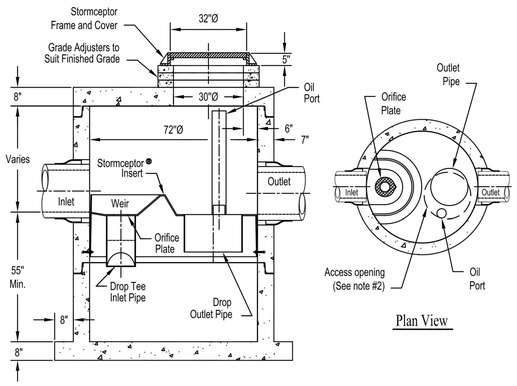

Notes:

1. The Use Of Flexible Connection is Recommended at The Inlet and Outlet Where Applicable.
2. The Cover Should be Positioned Over The Outlet Drop Pipe and The Oil Port.
3. The Stormceptor System is protected by one or more of the following U.S. Patents: #5753115, #5849181, #6068765, #6371690, #7582216, #7666303.
4. Contact a Concrete Pipe Division representative for further details not listed on this drawing.

Rinker 028

NOTE:
1. PRODUCT TO BE INLINE STORMCEPTOR STC900 BY RINKER MATERIALS, WWW.RINKERPIPE.COM, OR APPROVED EQUAL.
2. INSTALL PER MANUFACTURER INSTRUCTIONS.

HYDRODYNAMIC STORM SEPARATOR

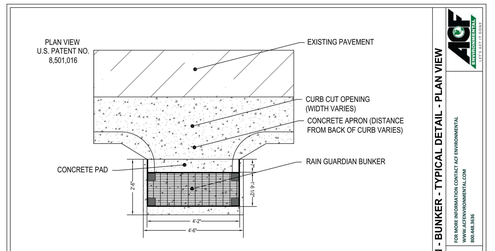

NOTES:
1. SLAB DIMENSIONS, DISTANCE FROM CURB, AND CHAMBER ELEVATION MAY VARY WITH SITE CONDITIONS.
2. THE TOP OF THE METAL GRATE, HOWEVER, SHOULD BE 1.5" - 2" BELOW THE OVERFLOW ELEVATION AND THE CONCRETE SLAB SHOULD EXTEND WELL BEYOND THE FILTER WALL TO SERVE AS A SPLASH DISSIPATER.

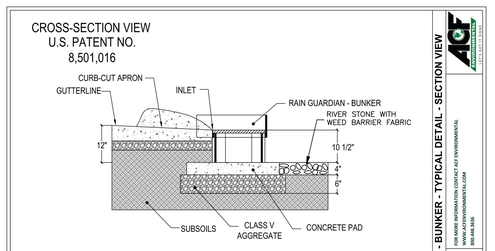

NOTES:
1. SLAB DIMENSIONS, DISTANCE FROM CURB, AND CHAMBER ELEVATION MAY VARY WITH SITE CONDITIONS.
2. THE TOP OF THE METAL GRATE, HOWEVER, SHOULD BE 1.5" - 2" BELOW THE OVERFLOW ELEVATION AND THE CONCRETE SLAB SHOULD EXTEND WELL BEYOND THE FILTER WALL TO SERVE AS A SPLASH DISSIPATER.

NOTE:
1. PRODUCT TO BE RAIN GUARDIAN "BUNKER" BY ACF ENVIRONMENTAL, WWW.ACFENVIRONMENTAL.COM, OR APPROVED EQUAL.
2. INSTALL PER MANUFACTURER INSTRUCTIONS.

RAIN GUARDIAN

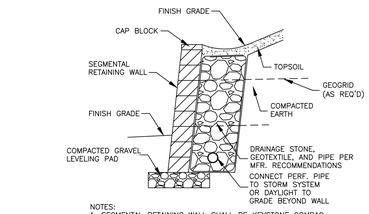

NOTES:
1. SEGMENTAL RETAINING WALL SHALL BE KEYSTONE COMPAC STRAIGHT-SPLIT BY KEYSTONE RETAINING WALLS, OR APPROVED EQUAL. COLOR AS SELECTED BY ENGINEER.
2. CONSTRUCT WALL IN ACCORDANCE WITH MANUFACTURER'S RECOMMENDATIONS.
3. CONTRACTOR SHALL PROVIDE TO ENGINEER ENGINEERED DRAWINGS SEALED BY A PENNSYLVANIA PROFESSIONAL ENGINEER (FOR EACH WALL) FOR CHOSEN WALL PRODUCT.

SEGMENTAL RETAINING WALL

GREENFIELD ARCHITECTS LTD.

An Affiliate of High Real Estate Group LLC

1853 William Penn Way
P.O. Box 10008
Lancaster, PA 17605-0008
(717) 293-4475
FAX (717) 293-4499
www.greenfieldarchitects.net

GREENFIELD ARCHITECTS, LTD.
These plans are copyrighted and are subject to copyright protection as an "architectural work" under Section 102 of the Copyright Act, 17 U.S.O. as amended December 1990 and known as Architectural Copyright Protection Act of 1990. The protection includes but is not limited to the overall form as well as the arrangement and composition of spaces and elements of design. Under such protection, any unauthorized use of these plans, or work represented, can legally result in the penalties provided.

Any reproduction of this document in part or whole without the express written permission of Greenfield Architects, Ltd. is strictly prohibited.

KELLER ENGINEERS

CIVIL • STRUCTURAL • SURVEY
www.keller-engineers.com
3500 E. College Avenue,Suite 1100
State College, PA 16801
P:(814) 231-2925

KELLER ENGINEERS, INC. EXPRESSLY RESERVES ITS COMMON LAW COPYRIGHT AND OTHER RIGHTS CONTAINED IN THESE PLANS AND DESIGNS. THEY ARE NOT TO BE REPRODUCED, CHANGED, ALTERED OR COPIED IN ANY FORM OR MANNER, NOR ARE THEY TO BE ASSIGNED WITHOUT WRITTEN PERMISSION AND CONSENT OF KELLER ENGINEERS, INC.

FILE NAME: PLOT/13-15 DETAILS.DWG

No.	Description	Date

FERGUSON PUBLIC WORKS BUILDING

FERGUSON TOWNSHIP

3147 RESEARCH DRIVE
STATE COLLEGE, PA 16801

Project Number	3809-1
Date	2/6/19
Drawn By	AJL
Checked By	BES

DETAILS

C-014

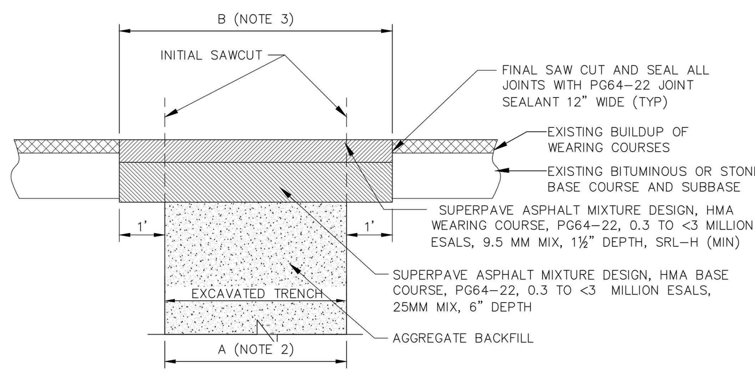

NOTES:
1. EXPOSED VERTICAL AND HORIZONTAL SURFACES SHALL BE PREPARED AS PER PUB. 408, SECT. 401.3(f).
2. TRENCH WIDTHS FOR PIPES IN LOCAL (TOWNSHIP, BOROUGH, PRIVATE) RIGHT OF WAYS SHALL BE PIPE DIAMETER AT THE BELL/FLANGE PLUS 1.33 FEET (A). THIS SHALL BE THE PAYMENT WIDTH WHEN ROCK EXCAVATION IS CLASSIFIED.
3. PAYMENT RESTORATION PAY WIDTHS SHALL BE PIPE DIAMETER AT THE BELL/FLANGE PLUS 3.33 FEET (B).
4. THE PAY WIDTH FOR STREET REPAVING ALSO APPLIES TO DRIVEWAY REPAVING.
5. IF THE FINAL SAWCUT IS WITHIN 3' OF THE CURB, EDGE OF PAVEMENT, OR EXISTING PAVEMENT JOINT, THE ENTIRE AREA WILL BE REPLACED.

LOCAL REPAVING REQUIREMENTS AND PAY WIDTHS FOR ROCK EXCAVATION AND REPAVEMENT RESTORATION

NOT TO SCALE

UNIVERSITY AREA JOINT AUTHORITY

SANITARY SEWER STANDARD DETAIL FOR UNIVERSITY AREA JOINT AUTHORITY
CENTRE COUNTY PENNSYLVANIA

PROJ. MGR. – BRB; DESIGN–; CADD– KEC; CHECKED–; SCALE– AS NOTED; DATE– JUNE 2015
DRAWING NO. 8; SHEET NO. 12 OF 22; PROJECT 001178.0562

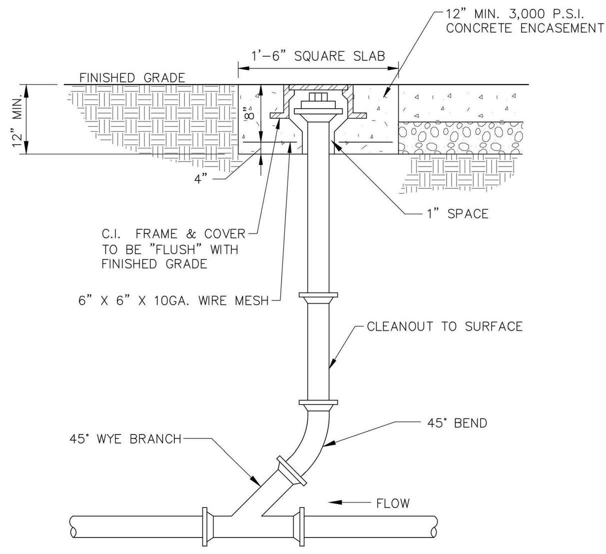

NOTES:
1. DETAILS FOR CLEANOUTS IN PRIVATE, RESIDENTIAL LAWN OR NON-TRAFFIC AREAS ARE THE SAME EXCEPT THE CONCRETE ENCASEMENT MAY BE OMITTED.

CLEANOUT CONSTRUCTION DETAIL FOR PRIVATE COLLECTION SYSTEM

NOT TO SCALE

UNIVERSITY AREA JOINT AUTHORITY

SANITARY SEWER STANDARD DETAIL FOR UNIVERSITY AREA JOINT AUTHORITY
CENTRE COUNTY PENNSYLVANIA

PROJ. MGR. – BRB; DESIGN–; CADD– KEC; CHECKED–; SCALE– AS NOTED; DATE– JUNE 2015
DRAWING NO. 10; SHEET NO. 14 OF 22; PROJECT 001178.0562

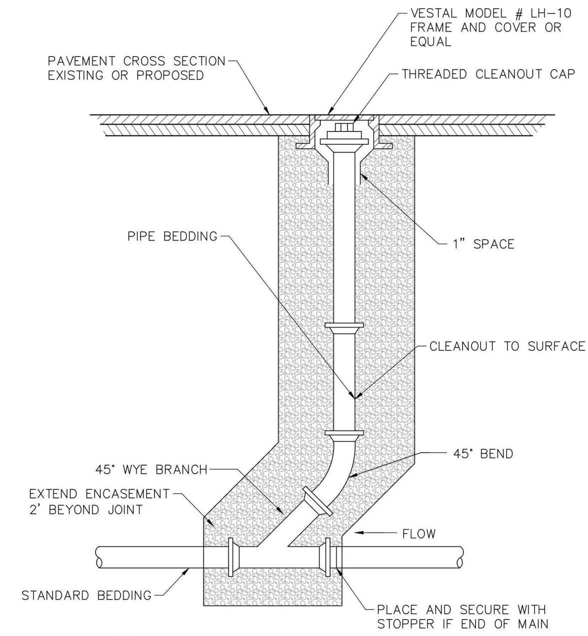

NOTES:
1. REFER TO DWG. NO. 4 FOR COVER INSTALLATION DETAIL.

CLEANOUT CONSTRUCTION DETAIL FOR PAVED AREAS

UNIVERSITY AREA JOINT AUTHORITY

SANITARY SEWER STANDARD DETAIL FOR UNIVERSITY AREA JOINT AUTHORITY
CENTRE COUNTY PENNSYLVANIA

PROJ. MGR. – BRB; DESIGN–; CADD– KEC; CHECKED–; SCALE– AS NOTED; DATE– JUNE 2015
DRAWING NO. 10A; SHEET NO. 15 OF 22; PROJECT 001178.0562

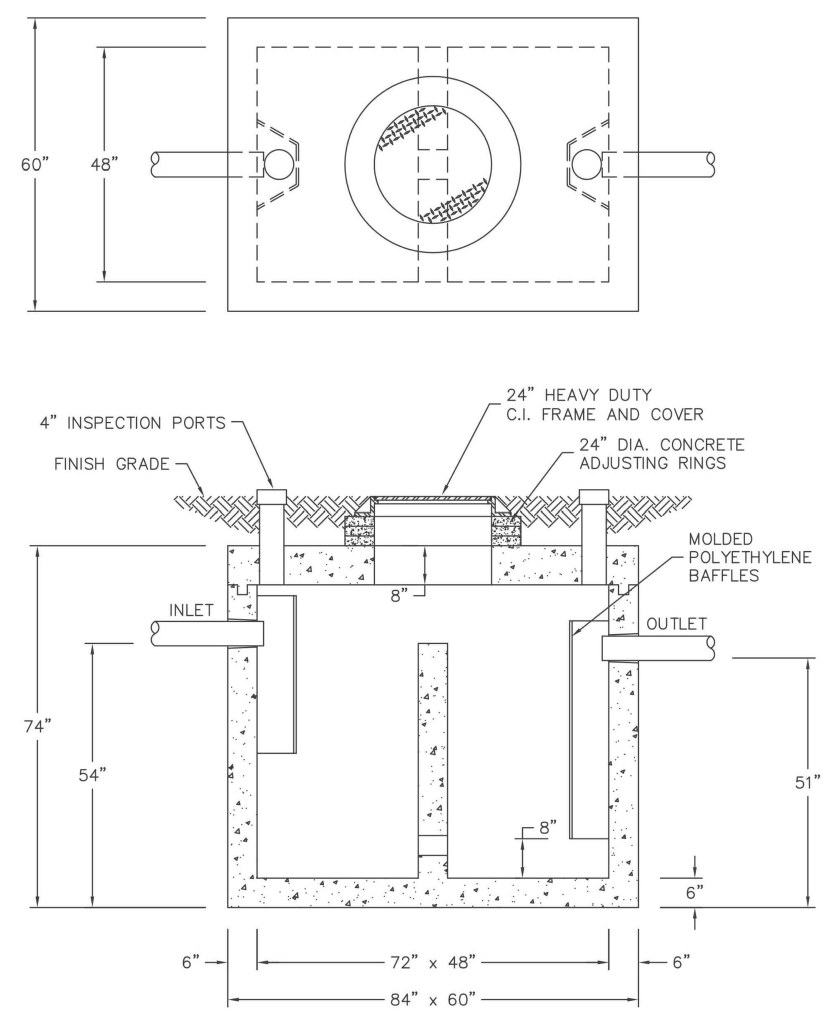

NOTE:
1. PRODUCT TO BE 600 GALLON BY MONARCH PRECAST, WWW.MONARCHPRECAST.COM, OR APPROVED EQUAL.

OIL-WATER SEPARATOR

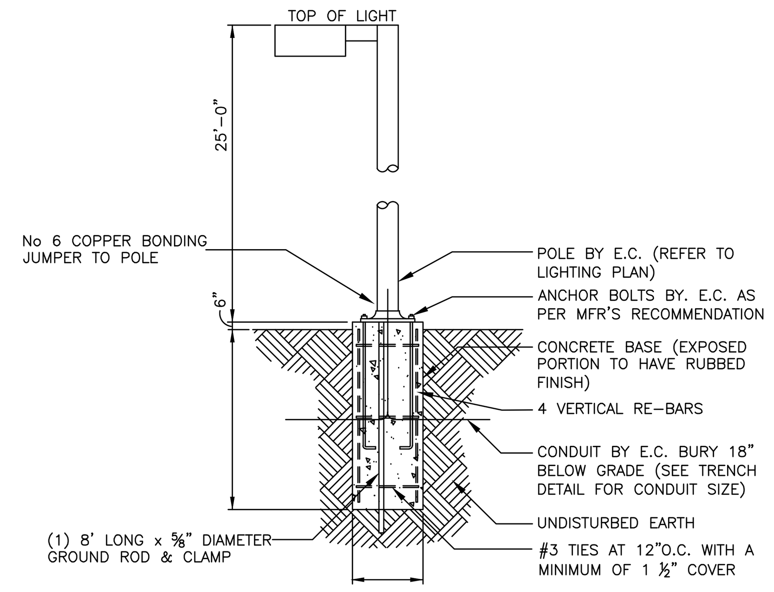

NOTES:
1. ALL PIERS TO BE 3000 PSI CONCRETE. REINFORCING TO BE GRADE 40, fy= 40 KSI.
2. NO LIGHT POLES SHALL BE TALLER THAN 15' ABOVE GRADE.

REINFORCEMENT SCHEDULE			
HEIGHT FROM FINISHED GRADE TO TOP OF LIGHT FIXTURE	MINIMUM DIAMETER OF PIER	MINIMUM DEPTH OF PIER BELOW GRADE	PIER REINFORCEMENT VERTICALLY
25'	**18"**	**5'-6"**	**4 #6**
20'	16"	5'-0"	4 #5

LIGHT POLE BASE

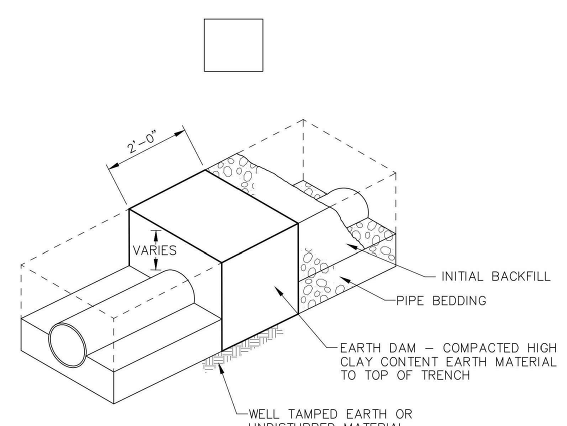

CLAY DIKE DETAIL

NOT TO SCALE

UNIVERSITY AREA JOINT AUTHORITY

SANITARY SEWER STANDARD DETAIL FOR UNIVERSITY AREA JOINT AUTHORITY
CENTRE COUNTY PENNSYLVANIA

PROJ. MGR. – BRB; DESIGN–; CADD– KEC; CHECKED–; SCALE– AS NOTED; DATE– JUNE 2015
DRAWING NO. 12; SHEET NO. 19 OF 22; PROJECT 001178.0562

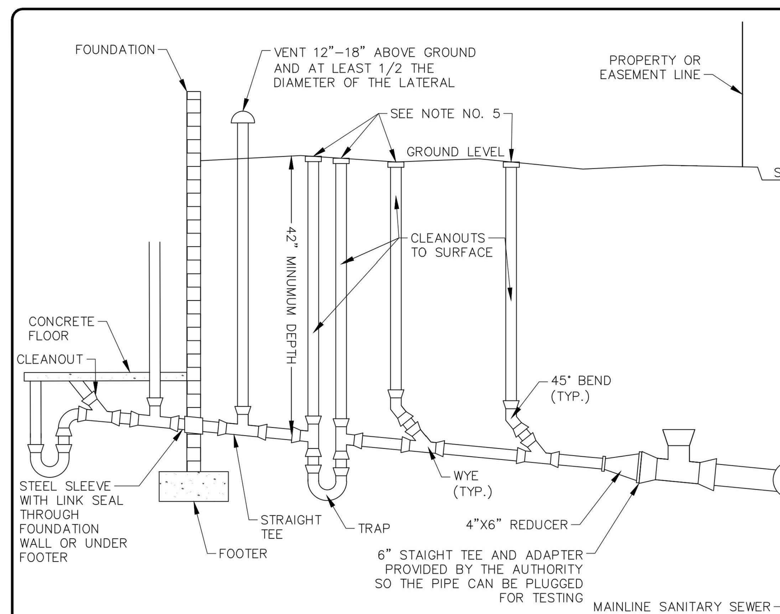

LATERAL SPECIFICATIONS:
1. 4" DIAMETER IS THE MINIMUM SIZE. LARGER SIZES WILL BE SPECIFIED BY THE AUTHORITY WHEN THE AMOUNT OF FLOW WARRANTS IT.
2. SLOPE SHALL BE 1/4" PER FOOT UNLESS APPROVED OTHERWISE BY THE AUTHORITY.
3. CLEANOUTS MUST BE INSTALLED EVERY 50' ON 4" PIPE AND EVERY 100' ON 6" PIPE.
4. LATERALS SHALL BE LAID IN AGGREGATE CUSHION AND BEDDING, REFER TO STANDARD PIPE TRENCH DETAIL
5. CLEANOUT TERMINAL(S) SHALL HAVE TREATMENT AT RESPECTIVE LOCATION. REFER TO DWG. NO.'S 10 & 10A.
6. ALL PIPING MATERIALS INCLUDING TRAPS FOR GRAVITY APPLICATIONS SHALL BE SCHEDULE 40 PVC. ANSI/ASTM D2665.
7. ALL SCHEDULE 40 PVC PIPE USED FOR PRESSURE APPLICATIONS MAY BE STAMPED ASTM D2665 BUT MUST ALSO INCLUDE A SECOND NUMBER, EITHER ASTM D1785 OR ASTM F480, WHICH ARE PRESSURE DESIGNATIONS.

INSPECTION:
1. WORK MUST BE INSPECTED AND TESTED BEFORE BACKFILLING.
2. THERE IS NO CHARGE FOR ONE-TIME INSPECTION UNLESS THE LATERAL IS LONGER THAN 150' AND/OR IF THE PIPE IS MORE THAN 4" IN DIAMETER.
3. INSPECTIONS REQUIRING MORE THAN ONE VISIT TO THE SITE WILL BE BILLED AT THE RATE IN EFFECT AT THE TIME OF INSPECTION.

TYPICAL SANITARY SEWER LATERAL

NOT TO SCALE

UNIVERSITY AREA JOINT AUTHORITY

SANITARY SEWER STANDARD DETAIL FOR UNIVERSITY AREA JOINT AUTHORITY
CENTRE COUNTY PENNSYLVANIA

PROJ. MGR. – BRB; DESIGN–; CADD– KEC; CHECKED–; SCALE– AS NOTED; DATE– JUNE 2015
DRAWING NO. 11; SHEET NO. 16 OF 22; PROJECT 001178.0562

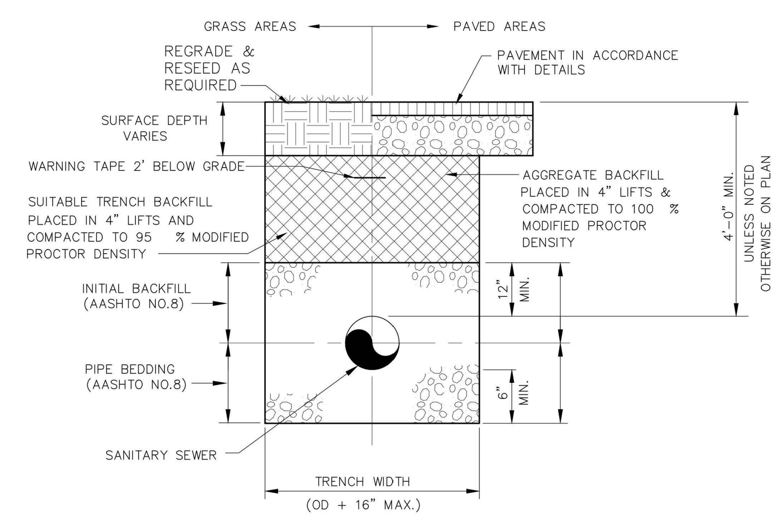

PIPE TRENCH

NOT TO SCALE

UNIVERSITY AREA JOINT AUTHORITY

SANITARY SEWER STANDARD DETAIL FOR UNIVERSITY AREA JOINT AUTHORITY
CENTRE COUNTY PENNSYLVANIA

PROJ. MGR. – BRB; DESIGN–; CADD– KEC; CHECKED–; SCALE– AS NOTED; DATE– JUNE 2015
DRAWING NO. 5C; SHEET NO. 9 OF 22; PROJECT 001178.0562

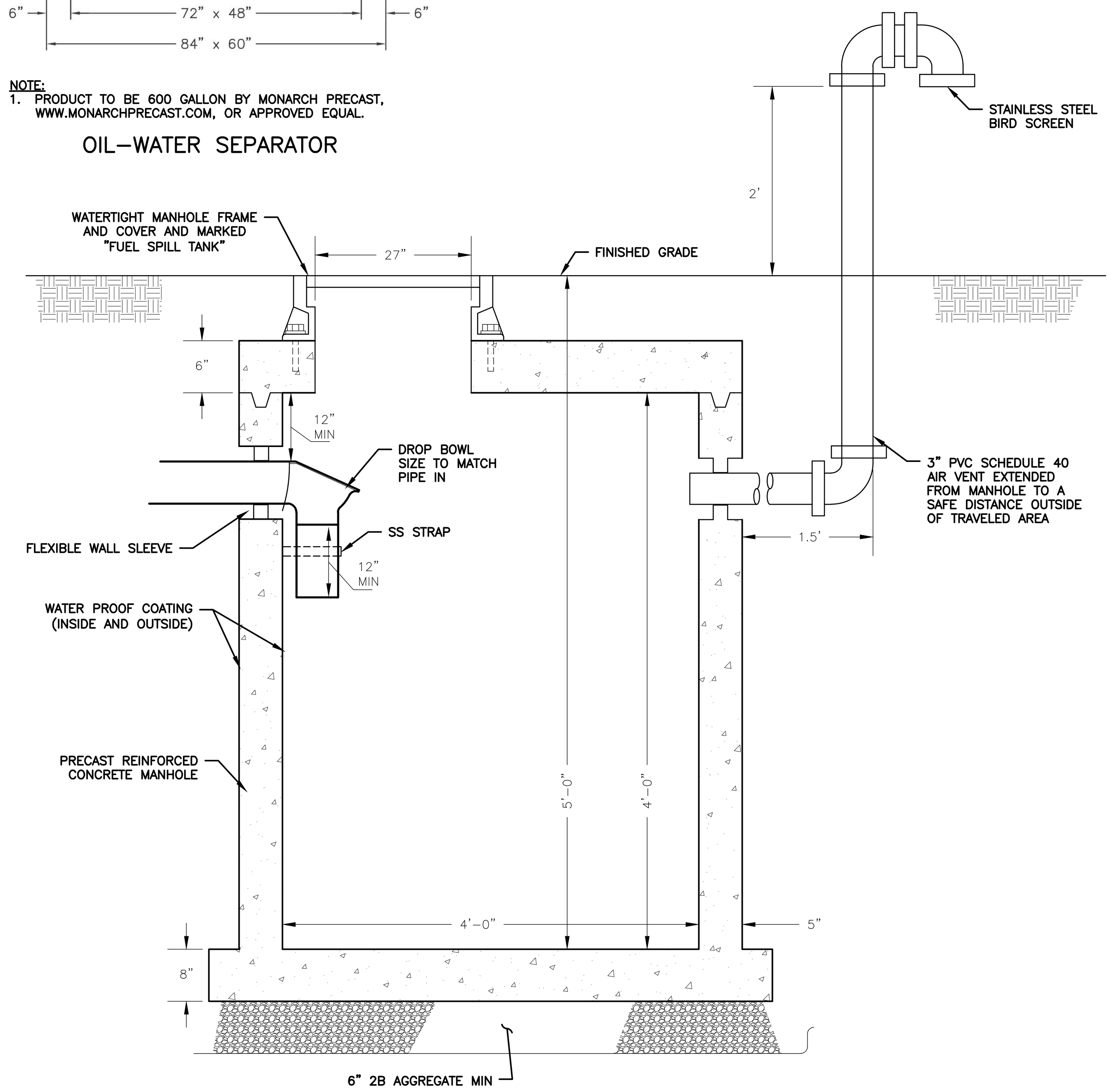

NOTE: TEST MANHOLE FOR WATERTIGHTNESS

FUEL SPILL TANK

ALED4T78N
ALED3T78N
ALED3T78N

RAB Outdoor

Bronze

Note: Fixture will come fully assembled with the frame and lens shown above.

Project:	Type:
Prepared By:	Date:

Driver Info		LED Info	
Type:	Constant Current	Watts:	78W
120V:	0.66A	Color Temp:	4000K (Neutral)
208V:	0.41A	Color Accuracy:	72 CRI
240V:	0.35A	L70 Lifespan:	100,000
277V:	0.30A	Lumens:	8,941
Input Watts:	76W	Efficacy:	118 LPW
Efficiency:	N/A		

Technical Specifications

Listings
UL Listing: Suitable for wet locations as a downlight
DLC Listed: This product is on the Design Lights Consortium (DLC) Qualified Products List and is eligible for rebates from DLC Member Utilities. DLC Product Code: P0000179U
IESNA LM-79 & IESNA LM-80 Testing: RAB LED luminaires and LED components have been tested by an independent laboratory in accordance with IESNA LM-79 and LM-80.
Dark Sky Conformance: Conforms to (allows for conformance to) the IDA's fully shielding requirement, emitting no light above 90 degrees (with the exclusion of incidental light reflecting from fixture housing, mounts, and pole).

LED Characteristics
Lifespan: 100,000-hour LED lifespan based on IES LM-80 results and TM-21 calculations
LEDs: Six (6) multi-chip, 13W, high-output, long-life LEDs
Color Consistency: 3-step MacAdam Ellipse binning to achieve consistent fixture-to-fixture color
Color Stability: LED color temperature is warrantied to shift no more than 200K in CCT over a 5 year period
Color Uniformity: RAB's range of CCT (Correlated Color Temperature) follows the guidelines of the American National Standard for Specifications for the Chromaticity of Solid State Lighting (SSL) Products, ANSI C78.377-2017.

Construction
IES Classification: The Type III distribution is ideal for roadway, general parking, and other area lighting applications where a larger pool of lighting is required. It is intended to be located near the side of the area, allowing the light to project outward and fill the area.
Ambient Temperature: Suitable For use in 40°C (104°F)
Cold Weather Starting: Minimum starting temperature is -40°C (-40°F)
Thermal Management: Superior heat sinking with external Air-Flow fins
Effective Projected Area: EPA = 0.75
Lens: Tempered glass lens
Housing: Die cast aluminum housing, lens frame and mounting arm
IP Rating: Ingress Protection rating of IP66 for dust and water
Mounting: Universal mounting arm compatible for hole spacing patterns from 1" to 5 1/2" center to center. Round Pole Adaptor plate included as a standard. Easy slide and lock to mount fixture with ease. Round pole diameter must be >4" to mount fixtures at 90° orientation.

Reflector: Specular vacuum-metallized polycarbonate
Gaskets: High temperature silicone gaskets
Finish: Formulated for high-durability and long lasting color
Green Technology: Mercury and UV-free. RoHS compliant components.

Electrical
Driver: Constant Current, Class 2, 2000mA, 100-277V, 50-60Hz, 1.1A, Power Factor 99%
THD: 5.2% at 120V, 13.6% at 277V
Surge Protection: 4kV
Power Factor: 99.5% at 120V, 93.7% at 277V

Need help? Tech help line: (888) RAB-1000 Email: sales@rablighting.com Website: www.rablighting.com
Copyright © 2019 RAB Lighting Inc. All Rights Reserved Note: Specifications are subject to change at any time without notice

LIGHT FIXTURE 'A','B','C'

D-Series Size 2
LED Wall Luminaire

d"series

BartonAssociates — 2017117.00 — TYPE XB1

Type

Hit the Tab key or mouse over the page to see all interactive elements.

A+ Capable Luminaire

This item is an A+ capable luminaire, which has been designed and tested to provide consistent color appearance and system-level interoperability.
- All configurations of this luminaire meet the Acuity Brands' specification for chromatic consistency
- This luminaire is A+ Certified when ordered with DTL® controls marked by a shaded background. DTL DLL equipped luminaires meet the A+ specification for luminaire to photocontrol interoperability1
- This luminaire is part of an A+ Certified solution for ROAM® or XPoint™ Wireless control networks, providing out-of-the-box control compatibility with simple commissioning, when ordered with drivers and control options marked by a shaded background1

To learn more about A+, visit www.acuitybrands.com/aplus.
1. See ordering tree for details.
2. A+ Certified Solutions for ROAM require the order of one ROAM node per luminaire. Sold Separately: Link to Roam; Link to DTL DLL

Specifications
Luminaire
Width: 18-1/2" (47.0 cm); Weight: 21 lbs (9.5 kg)
Depth: 10" (25.4 cm)
Height: 7-5/8" (19.4 cm)

Back Box (BBW)
Width: 5-1/2" (14.0 cm); BBW Weight: 1 lbs (0.5 kg)
Depth: 1-1/2" (3.8 cm)
Height: 4" (10.2 cm)

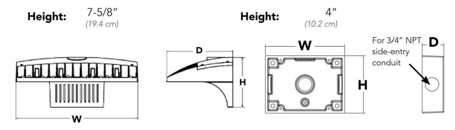

A+ Capable options indicated by this color background.

Ordering Information — EXAMPLE: DSXW2 LED 30C 700 40K T3M MVOLT DDBTXD

DSXW2 LED

Series	LEDs	Drive Current	Color temperature	Distribution	Voltage	Mounting	Control Options
DSXW2 LED	20C 20 LEDs (two engines); 30C 30 LEDs (three engines)	350 350 mA; 530 530 mA; 700 700 mA; 1000 1000 mA (1 A)	30K 3000 K; 40K 4000 K; 50K 5000 K; AMBPC Amber phosphor converted	T2S Type II Short; T2M Type II Medium; T3S Type III Short; T3M Type III Medium; T4M Type IV Medium; TFTM Forward Throw Medium; ASYDF Asymmetric diffuse	MVOLT; 120; 208; 240; 277; 347; 480	Shipped included: (blank) Surface mounting bracket; Shipped separately: BBW Surface-mounted back box (for conduit entry)	Shipped installed: PE Photoelectric cell, button type; PER NEMA twist-lock receptacle only (control ordered separate); PERS Five-wire receptacle only (control ordered separate); PER7 Seven-wire receptacle only (control ordered separate); DMG 0-10V dimming driver (control ordered separate); PIR 180° motion/ambient light sensor, <15' mtg ht; PIRH 180° motion/ambient light sensor, 15-30' mtg ht; PIR1FC3V Motion/ambient sensor, 8-15' mounting height, ambient sensor enabled at 1fc; PIRH1FC3V Motion/ambient sensor, 15-30' mounting height, ambient sensor enabled at 1fc

Other Options		Finish (required)		
Shipped installed: SF Single fuse (120, 277, 347V); DF Double fuse (208, 240, 480V); HS House-side shield; SPD Separate surge protection	Shipped separately: BSW Bird-deterrent spikes; WG Wire guard; VG Vandal guard	DDBXD Dark bronze; DBLXD Black; DNAXD Natural aluminum; DWHXD White	DSSXD Sandstone; DDBTXD Textured dark bronze; DBLBXD Textured black; DNATXD Textured natural aluminum	DWHGXD Textured white; DSSTXD Textured sandstone

LITHONIA LIGHTING — One Lithonia Way • Conyers, Georgia 30012 • Phone: 800.279.8041 • www.lithonia.com

© 2012-2017 Acuity Brands Lighting, Inc. All rights reserved.

DSXW2-LED Rev. 10/25/17 Page 1 of 4

LIGHT FIXTURE 'D'

PHILIPS GARDCO

Garage & Canopy
SlenderForm
SFC/SFCR Canopy mount

BartonAssociates — 2017117.00 — TYPE XC1

Project:
Location:
Cat.No:
Type:
Quantity:
Notes:

Philips Gardco SlenderForm SFC/SFCR garage and canopy luminaire features high output LEDs and a sleek, yet powerful, low profile design. The thin 3" profile combined with LED high output performance make SlenderForm the ideal choice for exterior ceiling mount and canopy applications. SlenderForm luminaires also provide LED solutions for parking garage applications requiring higher light levels, including entrances, and for garage areas with high ceilings.

Ordering guide — example: SFC-DD-5W-48L-700-NW-G2-UNV-MGY

Prefix	Controls	Distribution	LED Count	Drive Current	LED Color - Generation	Voltage	Finish	Options
SFC SlenderForm Ceiling luminaire; SFCR SlenderForm Ceiling luminaire (recessed mounting)	– Standard Luminaire; DD 0-10V Dimming; MR Motion Response	3 Type III; 5W Type V, Wide Distribution; 5R Type V, Rectangular Distribution; CD Concentrated Downlight	48L 48 LEDs	250 250mA; 400 400mA; 550 550mA; 700 700mA; 900 900mA	NW-G2 Neutral White 4000K, 70CRI Generation 2; WW-G2 Warm White 3000K, 70CRI Generation 2; CW-G2 Cool White 5700K, 70CRI Generation 2	120 120V; 208 208V; 240 240V; 277 277V; 347 347V; 480 480V; UNV 120-277V	MGY Medium Gray	F1 Single Fuse (120, 277, 347V); F2 Double Fuse (208, 240, 277V); F3 Double Fuse (208, 240, 480V) Canadian double pull; DL Diffusing Lens (reduces performance significantly); PCB Button Photocontrol; BX Bird Excluding Shroud; JB J-Box for Pendant Mounting; GL Glass Lens assembly

1. SFCR recessed mount NOT available with 900mA, MR, PCB, BX or JB.
2. Luminaire includes 0-10V input wires for dimming control by a dimming system supplied by others.
3. Only available in 120 through 277V.
4. Specify actual input voltage.
5. Not available with SFCR recessed mount units.
6. Shroud is for Pendant mount only. 12" (30.48cm) minimum pendant length required. Pendant by others. Option is installed in the field only.
7. For rigid and swivel pendant mount. Pendants by others.

Accessories (order separately)
FSIR-100 — MR hand held programmer. For use with 'MR' motion response when field programming is required. If desired, only one is needed per job.

LED Wattage and Lumen Values Standard SFC & SFCR luminaires

Order Code	LED Qty	System Current (mA)	Color Temp (K)	Ave System Watts (W)	3 Lumen Output	3 Efficacy (lm/W)	5W Lumen Output	5W Efficacy (lm/W)	5R Lumen Output	5R Efficacy (lm/W)	CD Lumen Output	CD Efficacy (lm/W)
SFC or SFCR-48L-250-NW-G2	48	250	4000	38	4636	121	4804	125	4660	122	4656	122
SFC or SFCR-48L-400-NW-G2	48	400	4000	60	6932	116	7182	121	6968	117	6962	117
SFC or SFCR-48L-550-NW-G2	48	550	4000	82	9323	114	9660	119	9372	115	9364	115
SFC or SFCR-48L-700-NW-G2	48	700	4000	104	11609	112	12028	116	11670	112	11659	112
SFC or SFCR-48L-900-NW-G2	48	900	4000	133	14184	107	14696	111	14258	107	14245	107

Note: Due to rapid and continuous advances in LED technology, LED luminaire data is subject to change without notice and at the discretion of Philips. Lumen output by optic type will vary slightly. See IES files when available. All technical data is subject to change.

SlenderForm_SFC_LED 04/17 page 1 of 4

LIGHT FIXTURE 'E'

FXLED150T

RAB Outdoor

Bronze

Note: Fixture will come fully assembled with the frame and lens shown above.

Project:	Type:
Prepared By:	Date:

Driver Info		LED Info	
Type:	Constant Current	Watts:	150W
120V:	1.31A	Color Temp:	5000K (Cool)
208V:	0.80A	Color Accuracy:	72 CRI
240V:	0.69A	L70 Lifespan:	100,000
277V:	0.60A	Lumens:	20,868
Input Watts:	164W	Efficacy:	127 LPW
Efficiency:	91%		

Technical Specifications

Listings
UL Listing: Suitable for wet locations. Suitable for ground mounting.
IESNA LM-79 & LM-80 Testing: RAB LED luminaires and LED components have been tested by an independent laboratory in accordance with IESNA LM-79 and LM-80.
DLC Listed: This product is listed by Design Lights Consortium (DLC) as an ultra-efficient premium product that qualifies for the highest tier of rebates from DLC Member Utilities. DLC Product Code: P0000173K

LED Characteristics
Lifespan: 100,000-hour LED lifespan based on IES LM-80 results and TM-21 calculations
Note: All values are typical (tolerance +/- 10%)
LEDs: Multip-chip, high-output, long-life LEDs
Color Consistency: 7-step MacAdam Ellipse binning to achieve consistent fixture-to-fixture color
Color Stability: LED color temperature is warrantied to shift no more than 200K in CCT over a 5 year period
Color Uniformity: RAB's range of CCT (Correlated Color Temperature) follows the guidelines of the American National Standard for Specifications for the Chromaticity of Solid State Lighting (SSL) Products, ANSI C78.377-2017.

Construction
IP Rating: Ingress Protection rating of IP66 for dust and water
Maximum Ambient Temperature: Suitable for use in 40°C (104°F)
Effective Projected Area: EPA = 2
Cold Weather Starting: Minimum starting temperature is -40°C (-40°F)
Thermal Management: Superior thermal management with external "Air-Flow" fins
Lens: Tempered glass lens
Housing: Die-cast aluminum housing and door frame
Mounting: Heavy-duty Trunnion mount with stainless steel hardware
Reflector: Specular, vacuum-metalized polycarbonate

Gaskets: High-temperature silicone gaskets
Finish: Formulated for high-durability and long lasting color
Green Technology: Mercury and UV-free. RoHS compliant components.

Optical
NEMA Type: NEMA Beam Spread of 6H x 6V

Sensor Characteristics
Field & Beam Angles: Horizontal Beam Angle (50%): 91.8°, Vertical Beam Angle (50%): 73.5° Horizontal Field Angle (10%): 121.0°, Vertical Field Angle (10%): 108.0°

Other
Patents: The design of FXLED150 is protected by patents pending in US, Canada, China, Taiwan and Mexico
Equivalency: Equivalent to 400W Metal Halide
Buy American Act Compliance: RAB values USA manufacturing! Upon request, RAB may be able to manufacture this product to be compliant with the Buy American Act (BAA). Please contact customer service to request a quote for the product to be made BAA compliant.

Need help? Tech help line: (888) RAB-1000 Email: sales@rablighting.com Website: www.rablighting.com
Copyright © 2019 RAB Lighting Inc. All Rights Reserved Note: Specifications are subject to change at any time without notice

LIGHT FIXTURE 'F'

WPLED52

RAB Outdoor

LED 52W Wallpacks. 3 cutoff options. Patent Pending thermal management system. 100,000 hour L70 lifespan. 5-year, no-compromise warranty.

Bronze

Note: Fixture will come fully assembled with the frame and lens shown above.

Project:	Type:
Prepared By:	Date:

Driver Info		LED Info	
Type:	Constant Current	Watts:	52W
120V:	0.51A	Color Temp:	5000K (Cool)
208V:	0.33A	Color Accuracy:	73 CRI
240V:	0.29A	L70 Lifespan:	100,000
277V:	0.24A	Lumens:	7,392
Input Watts:	58W	Efficacy:	128 LPW
Efficiency:	90%		

Technical Specifications

Listings
UL Listing: Suitable for wet locations
DLC Listed: This product is on the Design Lights Consortium (DLC) Qualified Products List and is eligible for rebates from DLC Member Utilities. DLC Product Code: P0000173W
IESNA LM-79 & IESNA LM-80 Testing: RAB LED luminaires and LED components have been tested by an independent laboratory in accordance with IESNA LM-79 and LM-80.

LED Characteristics
Lifespan: 100,000-hour LED lifespan based on IES LM-80 results and TM-21 calculations
LEDs: Two (2) multi-chip, high-output, long-life LEDs
Color Consistency: 7-step MacAdam Ellipse binning to achieve consistent fixture-to-fixture color
Color Stability: LED color temperature is warrantied to shift no more than 200K in CCT over a 5 year period
Color Uniformity: RAB's range of CCT (Correlated Color Temperature) follows the guidelines of the American National Standard for Specifications for the Chromaticity of Solid State Lighting (SSL) Products, ANSI C78.377-2017.

Electrical
Driver: Constant Current, 720mA, Class 2, 100 - 277V, 50 - 60 Hz, 100 - 277VAC .8 Amps.
Surge Protection: 6kV
THD: 7.64% at 120V, 5.72% at 277V
Power Factor: 99.1% at 120V, 97.5% at 277V

Construction
Ambient Temperature: Suitable For use in 40°C (104°F)
Cold Weather Starting: Minimum starting temperature is -40°C (-40°F)
Housing: Precision die cast aluminum housing, lens frame
Mounting: Die-cast aluminum wall bracket with (5) 1/2" conduit openings with plugs. Two-piece bracket with tether for ease of installation and wiring.
Arm: Die-cast aluminum with wiring access plate
Cutoff: Standard (15°)

Reflector: Specular vacuum-metallized polycarbonate
Gaskets: High temperature silicone
Lens: Tempered glass
Finish: Formulated for high-durability and long lasting color
Green Technology: Mercury and UV-free. RoHS compliant components.

Other
Warranty: RAB warrants that our LED products will be free from defects in materials and workmanship for a period of five (5) years from the date of delivery to the end user, including coverage of light output, color stability, driver performance and fixture finish. RAB's warranty is subject to all terms and conditions found at
Patents: The WPLED design is protected by patents in the U.S. Pat D653,377, Canada Pat. 142252, China Pat. ZL201130356930.8, and Mexico Pat. 36921 and pending patent in TW.
Replacement: Replaces 250W HID

Need help? Tech help line: (888) RAB-1000 Email: sales@rablighting.com Website: www.rablighting.com
Copyright © 2019 RAB Lighting Inc. All Rights Reserved Note: Specifications are subject to change at any time without notice

LIGHT FIXTURE 'G'

GREENFIELD ARCHITECTS LTD.
An Affiliate of High Real Estate Group LLC
1853 William Penn Way
P.O. Box 10008
Lancaster, PA 17605-0008
(717) 293-4475
FAX (717) 293-4499
www.greenfieldarchitects.net

GREENFIELD ARCHITECTS, LTD.
These plans are copyrighted and are subject to copyright protection as an "architectural work" under Section 102 of the Copyright Act, 17 U.S.O. as amended December 1990 and known as Architectural Copyright Protection Act of 1990. The protection includes but is not limited to the overall form as well as the arrangement and composition of spaces and elements of design. Under such protection, any unauthorized use of these plans, or work represented, can legally result in the penalties provided.

Any reproduction of this document in part or whole without the express written permission of Greenfield Architects, Ltd. is strictly prohibited.

KELLER ENGINEERS
CIVIL • STRUCTURAL • SURVEY
www.keller-engineers.com
3500 E. College Avenue,Suite 1100
State College, PA 16801
P:(814) 231-2925

KELLER ENGINEERS, INC. EXPRESSLY RESERVES ITS COMMON LAW COPYRIGHT AND OTHER RIGHTS CONTAINED IN THESE PLANS AND DESIGNS. THEY ARE NOT TO BE REPRODUCED, CHANGED, ALTERED OR COPIED IN ANY FORM OR MANNER, NOR ARE THEY TO BE ASSIGNED WITHOUT WRITTEN PERMISSION AND CONSENT OF KELLER ENGINEERS, INC.

FILE NAME: PLOT/13-15 DETAILS.DWG

No.	Description	Date

FERGUSON PUBLIC WORKS BUILDING

FERGUSON TOWNSHIP

3147 RESEARCH DRIVE
STATE COLLEGE, PA 16801

Project Number	3809-1
Date	2/6/19
Drawn By	AJL
Checked By	BES

DETAILS

C-015