ISP-500B

Oil-free Scroll Vacuum Pump

FOR SALES AND SERVICE PLEASE CALL:
PTB SALES
T :: 866.332.0500
F :: 626.334.2151
www.ptbsales.com
DATE SERVICED: _____
View our inventory

Instruction Manual

Record of Pump Information
Serial Number:
Purchase date:
In Service date:
Dealer information:

Be sure to read this manual to understand operation and functions correctly. Only operators, who fully understand warnings, cautions and instructions, are to operate the equipment. **If not, fire, explosion, serious bodily injury or death may occur.**

• About Safety

Warnings and cautions are especially important for safe operation. Obey the safety instructions given below and take note of appropriate precautions. Marks and symbols have the following meanings.

Examples of Marks

WARNING	Indicates a potentially hazardous situation which, if not avoided, may result in serious injury or loss of life.
CAUTION	Indicates a potentially hazardous situation which, if not avoided, may result in minor or moderate injury or property damage.

Examples of Symbols

	Indicates you must be careful. We will explain briefly in or near the symbol. The example on the left is **"Be careful about electric shock"**
	Indicates [you must not do]. We will explain briefly in or near the symbol. (The example on the left is **"Do Not touch!"**
	Indicates an action you must do. We will explain briefly in or near the symbol. (The example on the left is **"Be sure to ground!"**

* Neither the manufacturer nor the dealer from whom the pump was purchased shall be responsible for any injury or damage caused by disregard of warnings, cautions or instructions.

Supplementary Notes

Important	Indicates notes which we ask you to observe. They are helpful to achieve full performance and function of the equipment.

Contents of Instruction Manual

Important Information……..……..2

Contents…….…….…3

1. For safe operation…….…… 4

2. Specifications…….…… 7

3. Names of each section…….…. 9

4. Outer dimensions……..….10

5. Installation……..….11

6. Operation…….....18

7. Maintenance and inspection…….…….24

8. Problems and remedies…….……..26

1.1 For safe operation

As the below points are very important for safe operation, be sure to rea and fully understand the contents before operation.

WARNING	
Pump clean gas	**Never pump toxic, explosive, flammable, corrosive gases, chemicals, solvents or powders.** ***Flowing substances, explosion or fire can cause bodily injury.**

Install at a safe site	**Install in an area without explosive, flammable substances.** ***If not, it can cause explosion or fire.**		Avoid moisture	**Install in an area which is not exposed to moisture such as rain or steam.** ***If not, it can cause electric shock.**
Cut off electric source	**Be sure to cut off electric source before wiring or inspection.** ***If not, it can cause electric shock or damage by turning section (fan).**		Do not touch	**Never put fingers or foreign matter into air hole of pump or clearance of cooling fins.** ***If done, it can cause injury.**
Ask qualified electrician	**Ask qualified electrician to perform electric wiring job.** ***If not, electric shock may occur.**		Do not alter	**Never alter the equipment.** ***If done, it can cause damage or shorter lifetime.**
Be sure to ground	**Be sure to ground.** ***If not, it can cause electric shock or fire.**		Ask specialist to perform repairs	**Ask specialist to perform repairs.** ***If not, it can cause failure, damage or shorter lifetime.**
Install breaker	**Prevent short-circuit with ground leakage breaker of proper capacity.** ***If not, it can cause electric shock or fire.**		Install emergency stop switch	**Be sure to install electric source switch.** ***If not, it can cause damage or fire.**

WARNING

	• **Be sure to check Wiring diagram before a power supply. (Refer to p. 13 and be shown inside terminal cover.) If not, it can cause damage.** • **The pump has a motor thermal protector. Motor restart without warning after protector trip.** • **Be sure to switch off electric source before maintenance or inspection. If not done, it can cause electric shock or bodily injury from turning objects.**

CAUTION

Install at a safe site	**Install in a safe place.** • **Install on a level foundation (an inclination of less than 5').** • **in a place free of dirt or dust from iron, stone or wood.** • **in a place free of corrosive gas.** **If done, it can cause damage, decrease in performance or shorter lifetime.**

Use at designated temperature	Use at temperature of 5 ~ 40°C (during operation). *If not, it can cause damage or shorter lifetime.		Conduct periodic Maintenance	Conduct periodic maintenance and inspections. *If not, it can cause damage or shorter lifetime.
Maintenance after pump is cool	Do the maintenance after pump becomes fully cool. *If not, it can cause burns.		Start or stop after closing isolation valve	Be sure to close isolation valve between pump and vacuum system (chamber) during startup and stop. *If not, debris attached to inside of pump can be drawn back to vacuum chamber.

Where to attach warning stickers

Always keep warning stickers clean. If they become dirty or lost, replace them with new ones. If you need stickers, contact the shop which sold the vacuum pump to you.

ISP-500B Single Phase

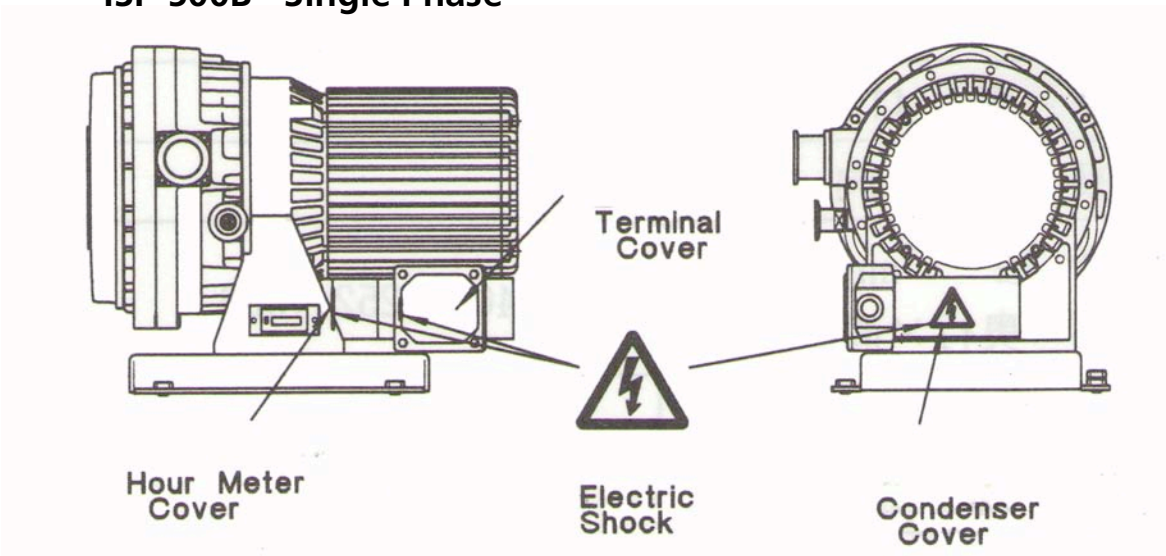

ISP-500B Three Phase

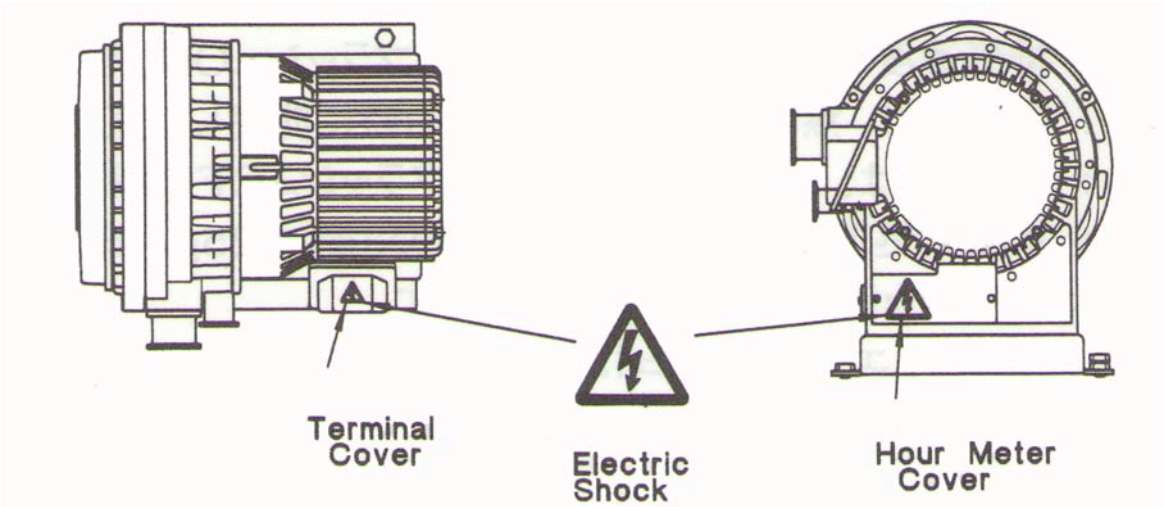

2.1 Specifications

Displacement (swept volume) L/min	
50 Hz	500
60 Hz	600

Ultimate pressure Pa (Torr)	≦1 (<7.5 x 10^{-3})
Leak tightness Pa (mbar) – L/S	≦1.0 x 10^{-2} (≦1.0 x 10^{-4})
Maximum inlet pressure	Atmospheric pressure
Ambient operating temperature range	5 °C ~ 4 0 °C

Motor Type		Single-phase induction motor 4P Totally Enclosed Insulation class BIP44 Capacitor start Thermal Protector TP212 Automatic Reset Type				3-phase induction motor 4P Totally enclosed Insulation Class B IP44					
Output kW		0.6									
Voltage V		100	115	200	230	200	208	230	380	415	460
Rated current A	50Hz	8.5	-	4.3	3.9	2.7	-	-	1.57	1.63	-
	60Hz	10.0	8.6	4.8	4.0	2.8	2.6	2.5	-	-	1.47
Revolution min-1 (rpm)	50Hz	1430	-	1430	1450	1460	-	-	1470	1470	-
	60Hz	1660	1720	1690	1730	1740	1740	1760	-	-	1770

Note 1: Pumping speed and ultimate pressure remain the same when air flush is ON (opened) and OFF (closed).

Note 2: Leak tightness is measured when pump is stopped and air flush is OFF (closed).

Note 3: Water vapor handling is less than 25g/day (25°C humitidy 60%) when air flush is ON(opened). Air flush volume is 10 liters/min.

Note 4: Air Flush is OFF (closed) when pump is delivered.

2.1 Specifications *(continued)*

	Single phase	Three-phase
Noise level at 1m dB(A)	**≦ 62**	**≦ 60**
with Air Flush ON (opened)	**≦ 70**	**≦ 68**

Inlet connection	**NW 40**	
Outlet connection	**NW 25**	
Direction of inlet	**Laterally fitted**	**(Perpendicularly fitted)**

Dimensions mm L x W x H	**443 x 328 x 372 (443 x 298 x 397)**	**372 x 328 x 372 (372 x 298 x 397)**
Mass kg	**44**	**38**
Cooling system	**Air cooled**	**Air cooled**
Others	**Hour meter & Air Flush**	**Hour meter & Air Flush**

Note 5: Noise level is measured at ultimate pressure in an anechoic room.

Note 6: Three Phase Motor does not have over heat protection. Be sure to install a heat protection like a breaker. (Refer to p. 15)

2.2 Performance data

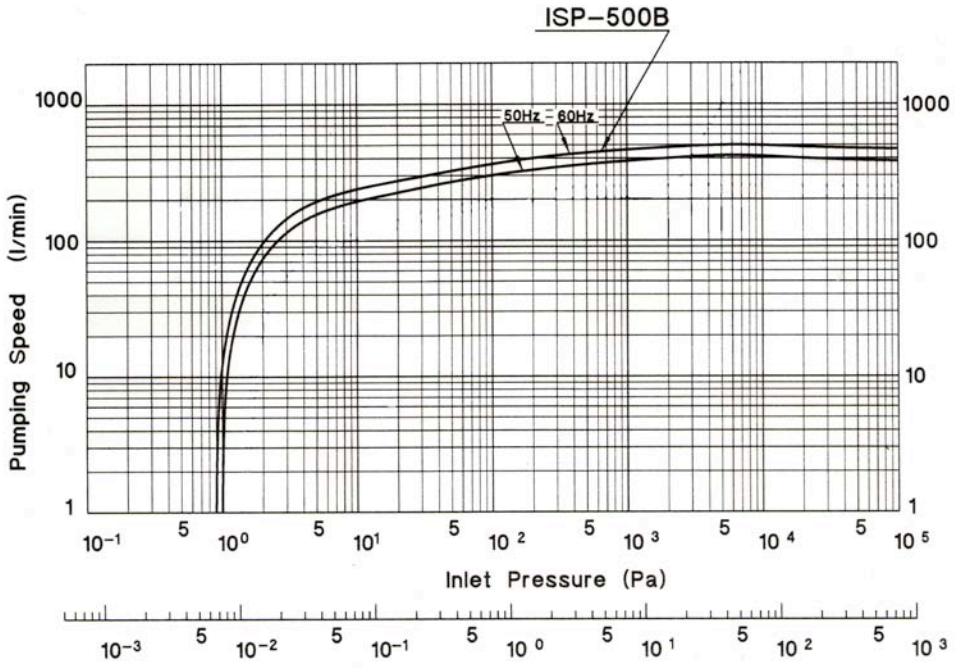

3.1 Names of each section

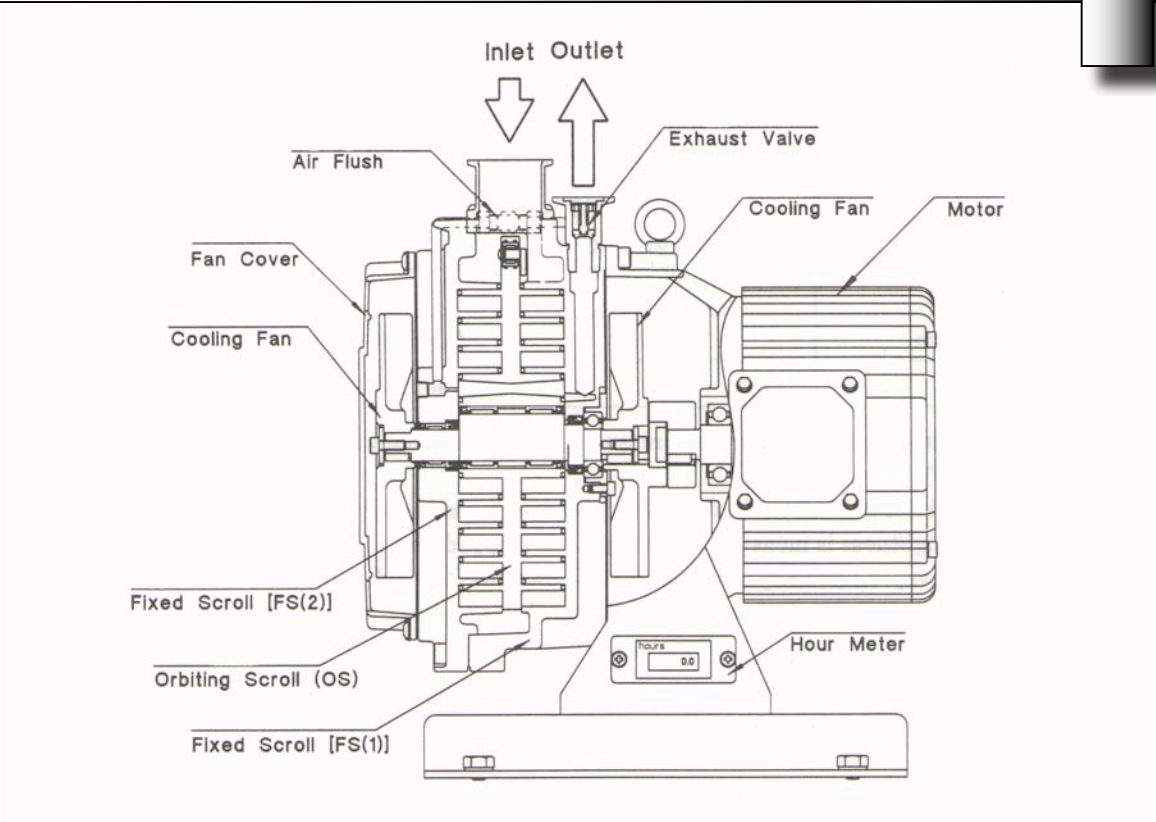

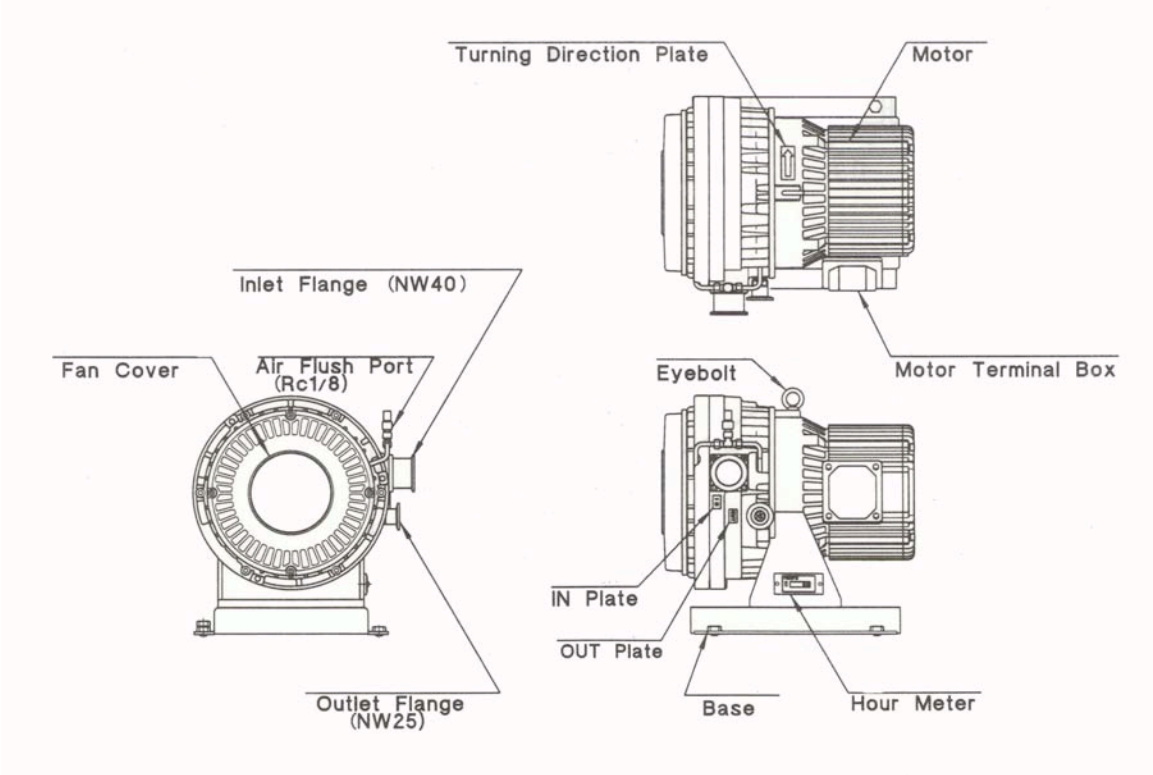

4.0 Outside Dimensions

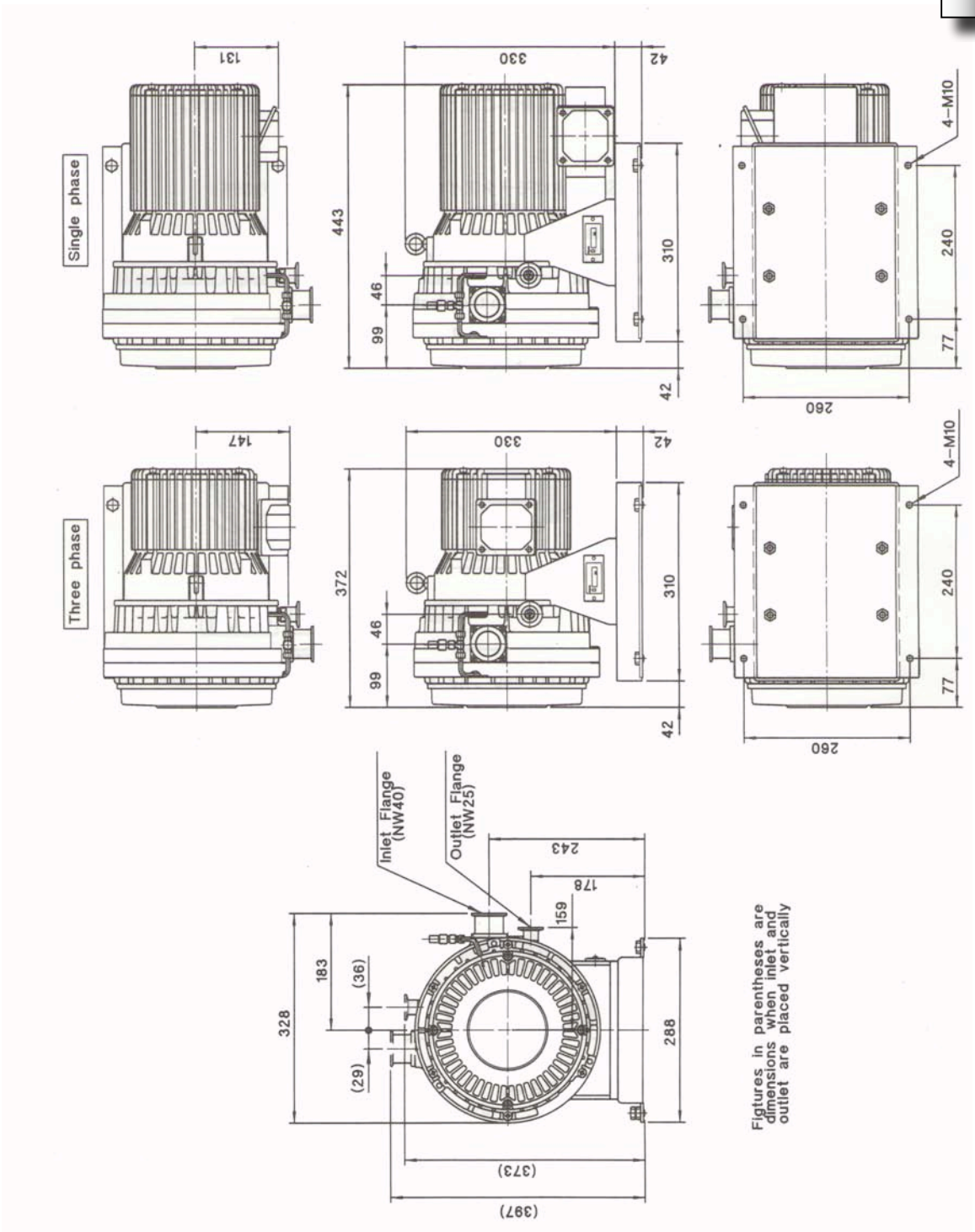

5.0 Installation

5.1 Check the Product

- Check that the package is right-side-up and then open it.
- Check that model of the product is correct as you ordered.
- Check that there is no damage. If there is any damage, contact the vendor which sold it to you.
- Remove inlet blank flange and outlet blank flange. If you continue operation with blank flanges, it can cause damage.
- Check that air flush filter for air flush port is in the plastic bag.

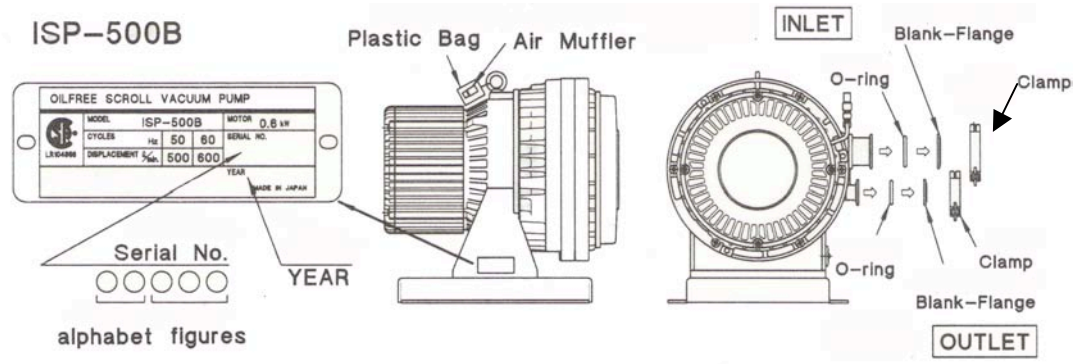

5.2 Installation

WARNING	
Danger of electric shock Install in an area which is not exposed to moisture such as rain or steam. Moisture on electric source connection can cause bodily injury by short circuit or electric shock.	Be careful about moisture
Danger of explosion and fire Install in an area which is not exposed to explosives, flammable gas, or other related things. If not, it can cause explosion or fire.	Be careful about fire

CAUTION

Operate at designated temperature.
Operate at ambient temperature of 5°C ~ 40°C.

Temperature

Pay attention to ventilation.
Install in a well-ventilated area (refer to right chart).

Necessary Ventilated Air
ISP500B
$8m^3$/min over $8m^3$/min

Poor ventilation can cause abnormal overheating, burns or failure since it is air-cooled type.

Ventilation

Install in a safe place.
Install in an area which is not exposed to dust or corrosive gas.
If not, it can cause damage or failure.

Avoid dust

Important

Install on a firm, level floor.
Be sure to install on a firm, level floor (less than 5° inclination).

Uneven installation can cause failure.
If installation floor is unstable, fix pump base by using 4-M10 tap screws of pump base.

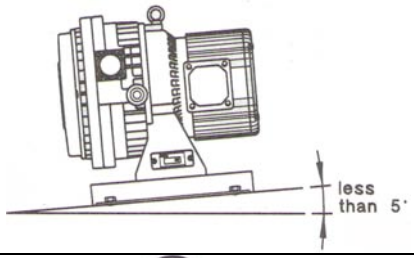

Install in an area which is not exposed to sunshine.
Direct sunshine can cause high temperature and failure.

Avoid direct sunshine

5.3 Wiring

WARNING

Ask qualified electrician.
Ask qualified electrician to perform electric wiring job.
If not, electric shock or fire may occur.

Ask qualified electrician

Turn off electric source.
Be sure to turn off main electric source on building site.
If not, it can cause injury due to electric shock.

Check electric source and voltage.
Check electric source and voltage before doing the wiring.
There are single-phase and three-phase motors for ISP-500B.
Three-phase has 200V/400V dual voltage. Single-phase has 100V/200V dual voltage.
It is wired to 200V connection when delivered to you.
Check electric source and voltage, and wiring.

Check voltage

How to Wire

Remove terminal cover of motor and check terminal block inside.
Wiring diagram is shown inside terminal cover.

- ISP-500B Single-phase

  You can change to 100V or 200V connection by changing terminal plate. It is wired to 200V connection when delivered to you.
  If you want to change to 100V connection, remove electric source terminal M4 nut and change terminal plate as illustrated below. Connect electric source cord through cable gland on the right side of terminal box.

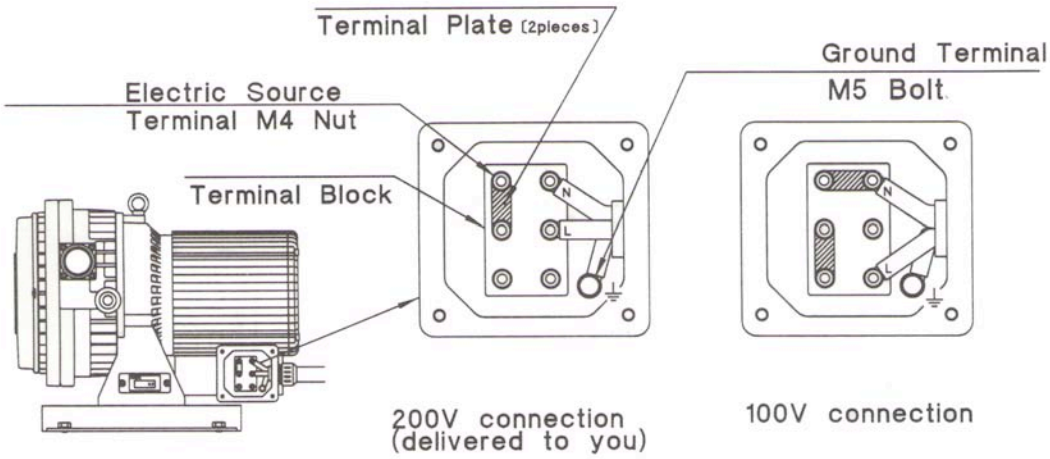

- ISP-500B Three-phase

  You can change to 200V or 400V connection by changing terminal plate. It is wired to 200V when delivered to you. If you want to change to 400V connection, remove electric source terminal M4 nut and change terminal plate as illustrated. Connect electric source cord through cable gland on the bottom side of terminal box. Connect L1-L2-L3 to U1-V1-W1 terminals of motor, respectively.

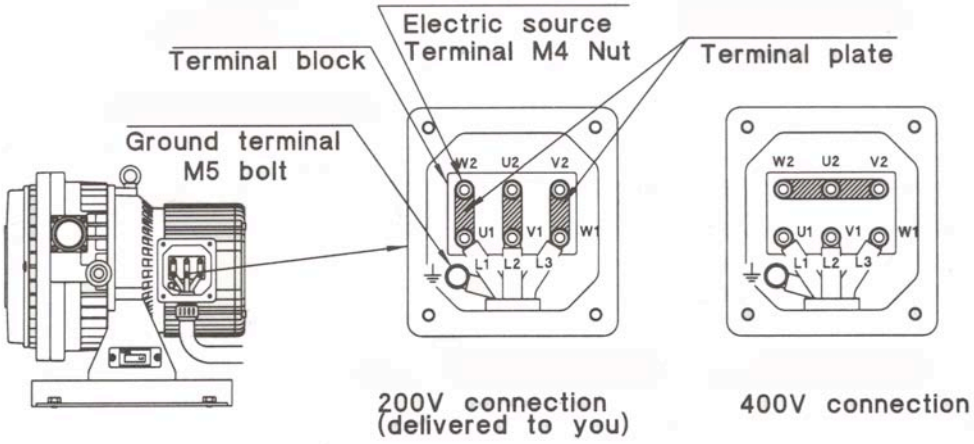

WARNING

Install emergency stop switch!

Be sure to install electric source switch (or breaker for emergency stop) for emergency stop.
If not, it can cause damage or fire.
Only the single phase motor has a thermal protector!
Single phase motor has a thermal protector with automatic reset function. Motor automatically restarts after protector trip when the motor gets cooler. When thermal protection works, be sure to switch off the power and inspect the abnormal conditions. (Refer to p.)

Install emergency stop switch
With a thermal protector (single phase only)

CSA REQUIREMENT

Three phase motor is NOT protected!
External protection in accordance with CE Code, Part 1, MUST be provided.
Minimum circuit ampacity of conductor is as follows:
ISP-500B single phase – 18A ISP-500B three phase – 15A

Maximum Branch Circuit Breaker is ISP-500B – 15A (1 Phase 100/115V is 20A)

Danger of fire due to electricity

1. Avoid motor burnout by installing recommended breaker. (refer to chart 1 on the next page)
If not, it can cause bodily injury or fire due to electricity.

2. Use electric source cord and ground cord of over 2mm² (over rated 18A/single phase and 15A/three phase) for ISP-500B. If not, it can cause bodily injury or fire due to electricity.

3. Firmly fit proper round crimp-style terminal to electric cord with application device and connect to motor terminal. If not, it can cause bodily injury or electrical fire due to looseness or disconnection.

4. Be sure to connect electric cord to terminal by using cable gland at ϕ20mm hole of motor terminal box. If not, it can cause bodily injury or fire due to looseness or disconnection.

5. Be sure to ground. Connect ground cord to ground terminal in motor terminal box. If not, it can cause bodily injury such as electric shock.

When Using This Pump In Europe

This vacuum pump must be equipped with a main disconnect device in accordance with requirements of EN60204-1, clause 5.3.2.

It is recommended to use a circuit breaker as main breaker which is suitable for isolation according to EN60947-2 and is equipped with an operating handle which is lockable in the OFF position and complies with the other requirements of EN60204-1, clause 5.3.

ISP-500B Three Phase with 200V connection

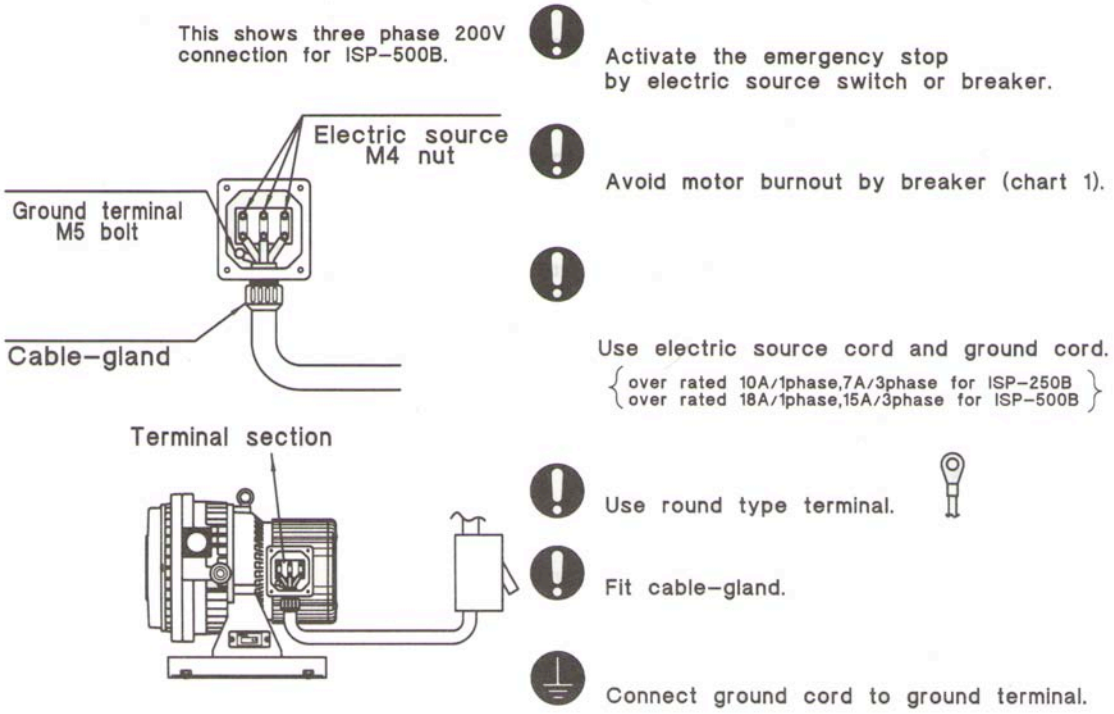

Chart 1 – Breaker Capacities for Single &Three-phase ISP-500B vacuum pumps

Single-phase specifications			*Three-phase specifications*		
V	*Hz*	*Recommended Breaker Capacity A*	*V*	*Hz*	*Recommended Breaker Capacity A*
100	*50*	*10.7*	*200*	*50*	*3.1*
100	*60*	*12.5*	*200*	*60*	*3.2*
115	*60*	*10.8*	*208*	*60*	*3.0*
200	*50*	*5.4*	*230*	*60*	*2.9*
200	*60*	*6.0*	*380*	*50*	*1.8*
230	*50*	*4.9*	*415*	*50*	*1.9*
230	*60*	*5.0*	*460*	*60*	*1.7*

Check turning direction after wiring

Turning direction of pump is clockwise viewed form motor side.

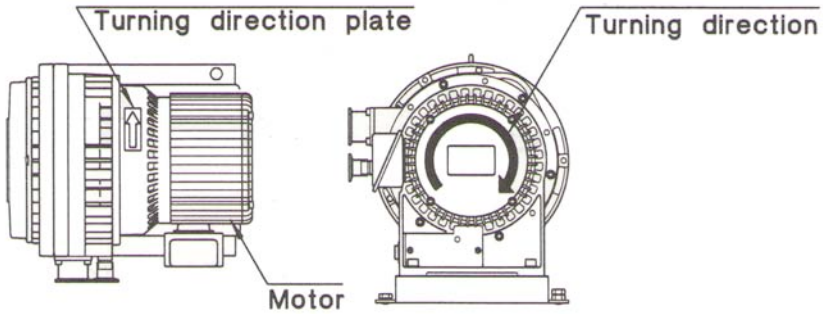

Operate pump with inlet opened, and check that air comes out from outlet. If it turns counterclockwise in case of three-phase, reverse any two phase wires in electric source connection. If you fit pump to vacuum system and switch pump ON-OFF with remote control, first check pump itself about turning direction and then fit it to vacuum system.

Important	
Avoid dropping foreign matter inside. When checking turning directions, avoid dropping foreign matter into inlet. A drop of foreign matter can cause failure.	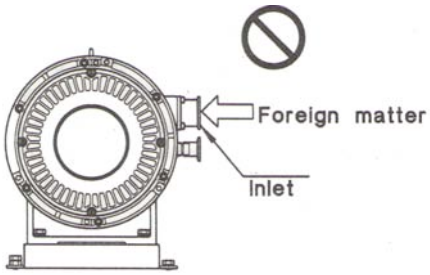

5.4 Connection to vacuum system

- Inlet of ISP-500B is NW40 and outlet is NW25.

- Use isolation valve (we recommend the use of leak valve also) between vacuum chamber and inlet (NW40 for ISP-500B). These valves (isolation valve and leak valve) are used to prevent the drawback of debris attached to the inside of vacuum pump into the vacuum chamber during start-up or shut-down. We recommend the use of automatic valve as isolation valve which closes during power failure in order to prevent the drawback of debris inside pump into the vacuum chamber during power failure.

- Use the clean connecting pipe between vacuum chamber and vacuum pump. We recommend the use of flexible pipe between inlet of pump and vacuum chamber so that vibration of pump does not transmit to vacuum chamber.

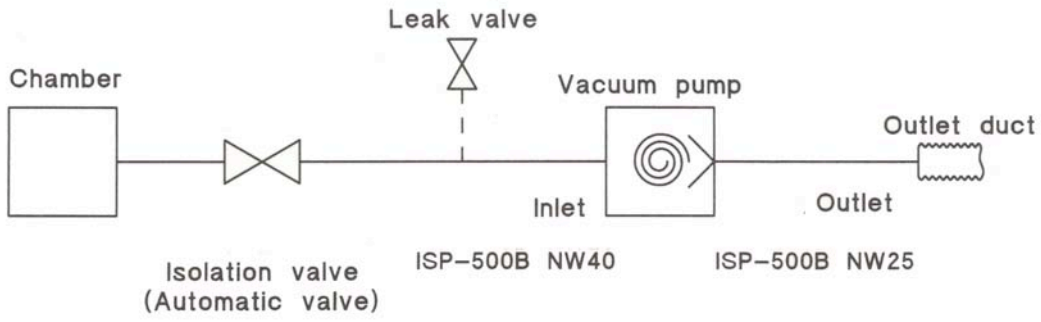

6.0 Operation

Be sure to use the procedure below to start up or shut down the pump.

Important

If it takes time to reach ultimate pressure of pump during initial operation (also operation after pump has not been used for a long time)

Close inlet, and continue operation for 6 – 8 hours while opening inlet for 3 ~ 5 seconds to atmosphere 2 – 3 times per hour. During pump stoppage, moisture might have entered inside of pump and decreased performance to reach ultimate pressure.

If pump have pumped liquid such as water or high humid air (over 60% RH) during operation
Moisture can deposit in pump and fail pump. Close isolation valve and open inlet for 3 ~ 5 seconds to atmosphere several times and exhaust moisture in pump to atmosphere.

CAUTION

Remove blank flanges from inlet and outlet, and operate pump.
Operation with blank flanges fitted can cause damage.

Close isolation valve during start-up or shut-down of pump.

Be sure to close isolation valve between vacuum pump and vacuum chamber during start-up or shut-down of pump.
If not, debris attached to the inside of pump can be drawn back to vacuum chamber.

Close isolation valve during start-up or shut-down of pump

Precautions during restarting of pump
Open inlet to atmosphere before restarting pump.
If not, it can imbalance temperature in pump, resulting in failure.

6.1 Start-up

1. Close isolation valve in order to prevent the drawback of debris attached to the inside of vacuum pump into vacuum chamber. (Open leak valve when using leak valve).

2. Switch vacuum pump on.

3. Check start-up of vacuum pump and open isolation valve (close leak valve when using leak valve) and pump the vacuum chamber.

Important

- Continuous pump operation at around ultimate pressure (for example, using as auxiliary pump of turbo molecular pump) can cause deposits of foreign matter or moisture in pump resulting in failure. Do the air flush operation, or close isolation valve and open inlet to atmosphere and operate (once a day for a few minutes) in order to remove foreign matter inside pump.
- Be careful not to damage air flush port (especially air flush filter). If not, it can cause damage or accident.
- During air flush operation (ON), noise level becomes a bit higher (by 7 – 8dB).
- Install pump in an area which is not exposed to debris such as iron, stone, polishing or wood dust. Debris can clog air mufflers, undercutting air flush effect.

6.2 Shut-down

1. In order to prevent the drawback of debris attached to inside of vacuum pump into vacuum during operation. Be sure to close isolation valve (open leak valve when using leak valve).

2. Switch vacuum pump off.

3. Open inlet of vacuum pump to atmosphere.

Important

- When pump stops, atmospheric air is drawn back from air flush port to the inside of pump, and pressure inside pump becomes about atmospheric pressure. In order to maintain vacuum in vacuum chamber and prevent the drawback of debris from vacuum pump into vacuum chamber, be sure to close isolation valve to vacuum chamber and stop pump.
- When operating with air flush OFF (closed), operate as per 6.4.

WARNING

Never pump hazardous gases.

Do not pump hazardous gases to humans, or explosive, flammable, toxic or corrosive gases or substances which contain chemicals, solvents or powders. If done, it can cause bodily injury due to harmful substances, explosion or fire.

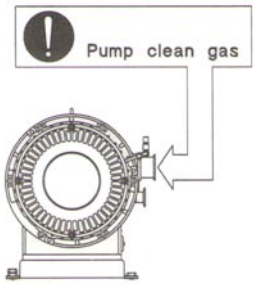

DO NOT PUMP:

- *Toxic gas*
- *Explosive gas*
- *Flammable gas*
- *Corrosive gas*
- *Chemicals*
- *Solvents*
- *Powders*
- *Water*
- *Liquids*

Be careful about entanglement.

Never put your fingers or foreign matter into wind holes of fan cover or motor set or clearance between cooling fans of FS(1) and FS(2). If done, it can cause bodily injury such as injury of fingers or foreign matter entering eyes.

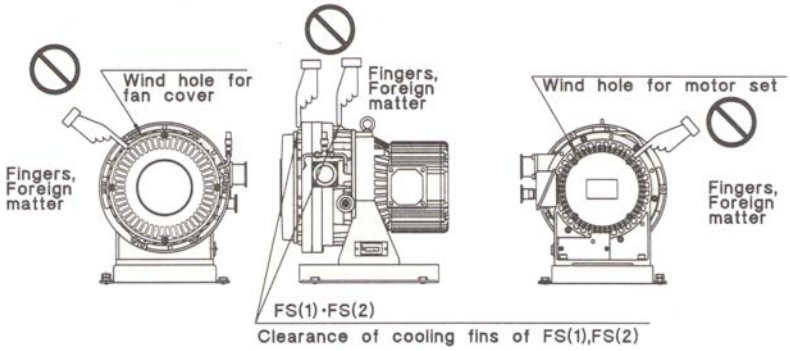

Never alter equipment.

Never remove or alter safety equipment or insulation parts.
If done, it can cause electric shock or bodily injury by turning objects.

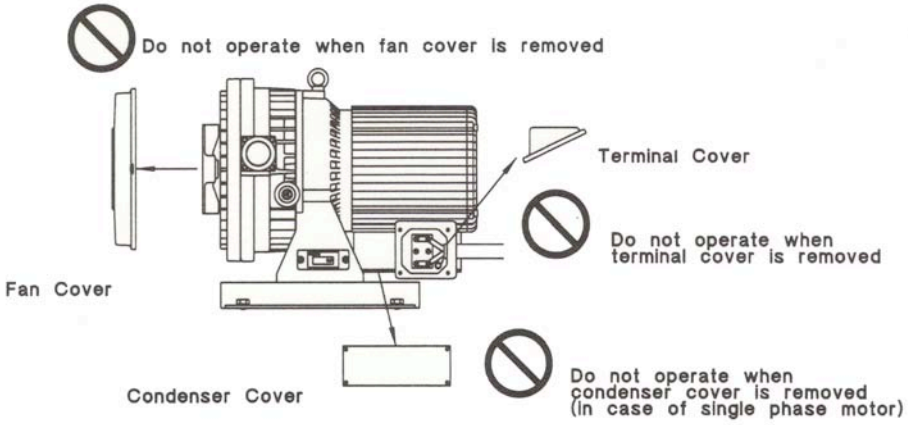

6.3 Pumping vapor (Air Flush operation)

This pump is equipped with air flush port. Before pumping vapor, fully read precautions below and understand the contents.

Purpose of air flush

Pumping of humid gas by vacuum pump can cause condensed moisture to remain in pump. This remaining moisture can cause failure to ultimate pressure to pump. Air flush operation is necessary to pump remaining moisture inside. Air flush operation does not only pump moisture but also recovers ultimate pressure.

Important

- Maintenance standard of this pump is based on clean gas pumping. The standard differs when pumping vapor.
- You must shorten maintenance standard (7.1) when pumping vapor since vapor temperature, disposal volume, disposal frequency and substances in vapor have influence on pump operation.
- When pumping vapor, pay attention to the following points.

6.3.1 Operation and Shut-down

1. Start pump as per 6.1
2. Stop pump as per 6.2

Important

Operate at designated temperature. When pumping vapor, inlet gas temperature must be less than 50°C. When vapor temperature is more than 50°C, install a chiller or trap in the piping between vacuum chamber and pump, in order to reduce inlet vapor temperature to less than 50°C. Pumping vapor of over 50°C can cause failure.	 Pump gas below 50 °C temperature
Operate with air flush port opened. When pumping vapor, be sure to open air flush port. (air flush operation) If you pump vapor with air flush port closed, condensed moisture remains in pump, resulting in failure. After vapor is pumped, continue air flush operation for over one hour. If you close air flush port or stop pump soon after vapor is pumped, condensed moisture remains in pump, resulting in failure. When supplying nitrogen gas or dry air to air flush port, set pressure equivalent to atmospheric pressure while keeping the flow less than 10 NL/min. If not done, higher pressure in pump can cause pump failure.	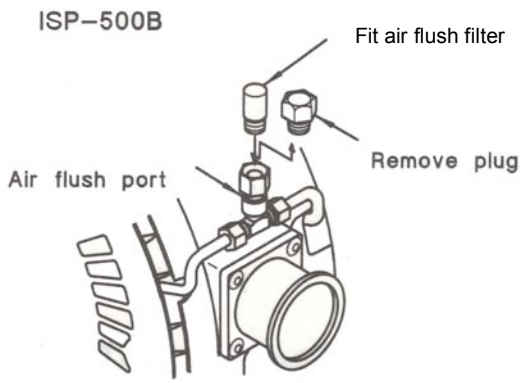

Important	
Continuous pumping of humid gas When pumping vacuum chamber while humidity in chamber is high, moisture volume drawn into pump differs according to temperature and pressure in chamber. When pumping chamber containing gas with humidity of over 60% RH be sure to open air flush port and operate pump. (air flush operation)	**Air Flush operation to pump humid gas**

6.4 When finishing Air Flush operation.

When you want to finish air flush operation, first stop pump and then do the following procedure. Never try to do during pump operation.

WARNING	
Never change air flush condition ON-OFF during operation. Change air flush port condition (ON-OFF) after stopping pump. Changing air flush condition during operation can fail pump and cause bodily injury.	**Stop pump and then change!**

Position of Air Flush Port

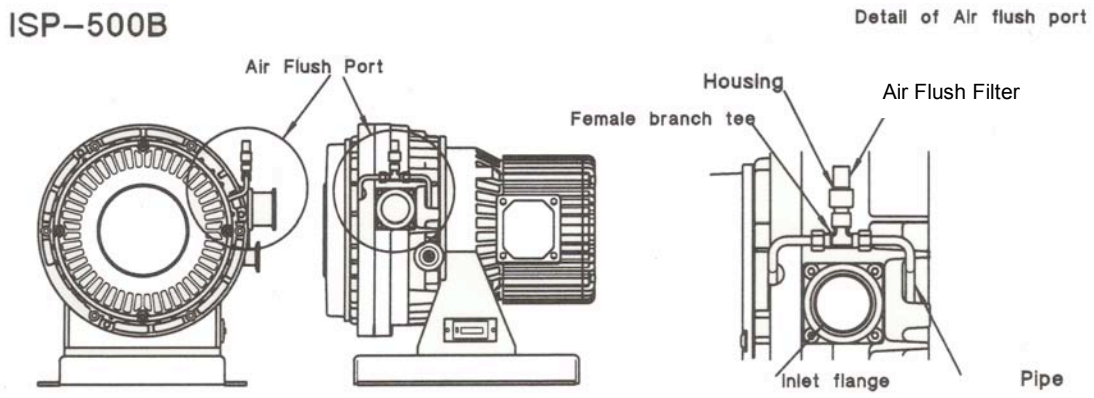

6.4.1 Finish Air Flush operation

To finish air flush operation, remove air flush filter of air flush port. Lightly tighten plug with spanner.

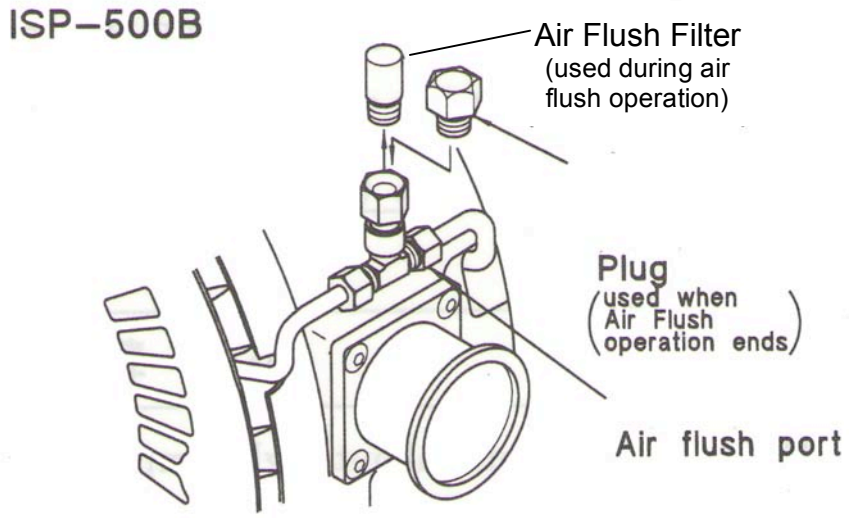

6.4.2 Restart Air Flush operation

To restart air flush operation, remove plug of air flush port and screw it into housing of air flush port.

Important
Stop pump before removing air flush filter, plug.

7.0 Maintenance and Inspection

Important

Neglect of maintenance and inspection can cause poor performance and pump failure. In order to remove debris accumulated in vacuum pump, operate pump several times for 3 ~ 5 seconds (once a day) while drawing atmospheric air.	**Observe maintenance and inspection**

WARNING

Be careful about high temperature Do the maintenance after the pump becomes cool enough. Maintenance soon after shutdown of operation can cause bodily injury such as burns.	Burn
Be careful of automatic restart Motor is thermally protected with automatic reset type for single phase motor. Motor automatically restarts after protector trip when the motor gets cooler. Be sure to switch off electric source before maintenance or inspection. When thermal protection works, be sure to switch off the power and inspect the abnormal conditions. (Refer to p.26)	**Be Careful of Automatic Restart!**

Switch off electric Source

Be sure to switch off electric source before maintenance or inspection. If not done, it can cause bodily injury such as electric shock or injury from turning objects.

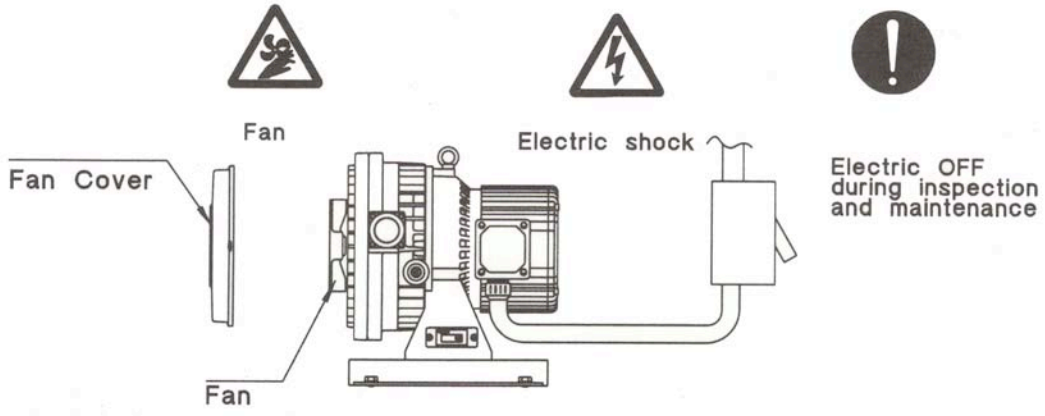

7.1 Maintenance

When maintenance time has been reached, be sure to contact the vendor who sold it to you. Never disassemble, reassemble or alter on user's side. We are not responsible for any accidents caused by disassembly, assembly or alteration which was done by the user or non-specialist.

Where to Inspect	*Interval: Yearly or every 8000 hr.*	*Interval: Biannually or every 16,000 hr.*	*Every 400 times vapor pumping*
Needle bearing [FS (2)]	Grease / Δ	O	Δ
Needle bearing [O S]	Grease / Δ	O	Δ
Ball bearing [F S (1)]	Δ	O	Δ
Needle bearing [Pin Crank]	Grease / Δ	O	Δ
O-ring [pin crank, Needle bearing]	Δ	O	Δ
Spider	Δ	O	Δ
Seal [pin crank – Needle bearing]	O	O	Δ
Shaft seal (2) [F S (2)]	O	O	Δ
Shaft seal (1) [F S (1)]	O	O	Δ
G seal [F S (2)]	O	O	Δ
G seal [O S]	O	O	Δ
G seal [F S (1)]	O	O	Δ
Exhaust valve set	O	O	Δ
O-ring [F S (2)]	O	O	Δ
O-ring [Inlet flange]	O	O	Δ
Tip Seal set (1)	Δ	O	Δ
Tip Seal set (2)	Δ	O	Δ
Pin Crank set	Δ	O	Δ
Air Flush kit	O	O	O

Δ = Replace if something goes wrong
O = Replace
FS = Fixed Scroll
O S = Orbiting Scroll

Note 1: Be sure to use designated ISP exclusive grease.
Note 2: The maintenance interval should be earlier one in either the period or running hours.
Note 3: When you want further maintenance and inspection at the time of either 6th year or 48,000 operating hours, please contact the distributor who sold the pump to you.

Important

Causes of Failure

Shorten maintenance time if conditions of installation or operation are bad.
Especially ambient temperature has great influence on failure.
Maintenance time is based on 5 - 40°C ambient temperature and 25°C average yearly temperature.
Shorten maintenance time if temperature is over it. If not, it can cause failure.
Maintenance time is not a guarantee time.

Shorten Maintenance Time

8.0 Problems and Remedies

If something goes wrong, please refer to the following chart and remedy problems.
If you cannot solve your problem, please contact the vendor who sold the pump to you.

Problems	Causes	Remedies
Pump does not rotate	Breaker malfunctions	Inspect and repair.
	Wiring becomes loose or cut.	Repair or replace.
	Voltage drops	Check length and size of cable
	Motor malfunctions	※ Inspect and repair.
	Pump malfunctions	※ Inspect and repair.
	Thermal protector trips	Inspect connection in thermal box Inspect wiring Inspect voltage ※ Inspect and repair
Ultimate pressure is Insufficient	Air leaks from piping	Check tightness of piping
	Moisture and solvent are drawn.	Open inlet to atmosphere and operate for a few minutes and then operate for a time (about 24 hours) while inlet is closed. Install a trap or a filter to prevent the water and solvent from pumping.
	O Ring is damaged	※ Replace
	Air Flush port is clogged	Clean air flush filter. ※ Replace.
Abnormal sound, vibration	Connection becomes loose	Tighten connection.
	The set is not level.	Make it level.
	Foreign matter enters inside of pump	※ Inspect and repair.
	Failure of exhaust valve	※ Inspect and repair.
	Failure of motor	※ Inspect and repair.
	Failure of pump	※ Inspect and repair.

※ = Contact the distributor who sold the pump to you.