Posted: 11/7/18 @ 4:20pm

Georgetown

Town Council Meeting Agenda

Meeting Date: Wednesday, November 14, 2018
Location: First State Community Action Agency, 308 North Railroad Avenue
Time: 7:00 PM Regular Meeting

Page

1. PLEDGE OF ALLEGIANCE

2. INVOCATION

3. ADOPTION OF AGENDA

4. APPROVAL OF OCTOBER 24, 2018 TOWN COUNCIL MINUTES

A.

5. FISCAL YEAR 2018 AUDIT PRESENTATION

3 - 77 A. Audited Financial Statement Town of Georgetown April 2018
Management Letter Town of Georgetown April 2018

6. INFORMATIONAL PRESENTATION WIRELESS ACCESS TECHNOLOGIES, INC.

78 - 117 A. Presentation (GEORGETOWN CIRCLE)
Site Plan (DOV GEORGETOWN CIRCLE - ZD Rev 0 - 181102)
Electromagnetic Exposure Analysis (GEORGETOWN CIRCLE)
Interference Analysis (DOV - GEORGETOWN CIRCLE)
Radio Frequency Design Analysis (GEORGETOWN CIRCLE)
Letter to Residents (300 feet) (2018-11-05)

7. 1ST READING OF ORDINANCES

118 - 121 A. Ordinance #2018-004 - Camping
Ordinance 2018-04 Camping (Final)

122 - 124 B. Ordinance #2018-005 - Multi-family Equivalent Dwelling Units (EDU's)
Ordinance 2018-05 Multi-family EDU's (Final)

8. COMPREHENSIVE PLAN MAP AMENDMENT APPROVAL

125 - 133 A. Village of College Park
PLUS Application 2018-09-06 VOCP
PLUS Comments 2018-09-06 VOCP

9. COMPREHENSIVE PLAN MAP AMENDMENT REQUEST

134 - 136 A. Whispering Breeze
Whispering Breeze TC Request 181114 Packet

10. DEPARTMENTAL REPORTS

137 - 138 A. Gene Dvornick – Town Manager
Town Manager Report - 2018-11-14

139 - 140 B. Eric Rust – Superintendent of the Wastewater Reclamation Facility
Town Council Meeting11-14-18
Lagoon Depth Graph - November 14, 2018

11. PUBLIC COMMENT

12. ADJOURNMENT

TOWN OF GEORGETOWN

FINANCIAL STATEMENTS

FOR THE YEAR ENDED APRIL 30, 2018

TOWN OF GEORGETOWN
TABLE OF CONTENTS
FOR THE YEAR ENDED APRIL 30, 2018

	PAGES
INDEPENDENT AUDITOR'S REPORT	1 - 3
MANAGEMENT'S DISCUSSION AND ANALYSIS	4 - 8
BASIC FINANCIAL STATEMENTS	
Government-wide Financial Statements	
Statement of Net Position	9
Statement of Activities	10
Fund Financial Statements	
Balance Sheet - Governmental Fund	11
Reconciliation of the Governmental Fund Balance Sheet to the Government-wide Statement of Net Position	12
Statement of Revenues, Expenditures and Changes in Fund Balance - Governmental Fund	13
Reconciliation of the Statement of Revenues, Expenditures and Changes in Fund Balance of Governmental Fund to the Statement of Activities	14
Statement of Revenues, Expenditures and Changes in Fund Balance - Budget and Actual - General Fund	15
Statement of Net Position - Proprietary Funds	16
Statement of Revenues, Expenses and Changes in Fund Net Position - Proprietary Funds	17
Statement of Cash Flows - Proprietary Funds	18 - 19
Notes to Basic Financial Statements	20 - 48
REQUIRED SUPPLEMENTARY INFORMATION	
Schedule of the Town's Proportionate Share of the Net Pension Liability - County & Municipal Other Employees' Pension Plan - A Cost Sharing Defined Benefit Pension Plan (Last 10 Years)	49
Schedule of the Town's Proportionate Share of the Net Pension Liability - County & Municipal Police and Firefighters' Pension Plan - A Cost Sharing Defined Benefit Plan (Last 10 Years)	50

TOWN OF GEORGETOWN
TABLE OF CONTENTS - CONTINUED
FOR THE YEAR ENDED APRIL 30, 2018

	PAGES
REQUIRED SUPPLEMENTARY INFORMATION - CONTINUED	
Schedule of Contributions - County & Municipal Other Employees' Pension Plan - A Cost Sharing Defined Benefit Plan (Last 10 Years)	51
Schedule of Contributions - County and Municipal Police & Firefighters' Pension Plan - A Cost Sharing Defined Benefit Pension Plan (Last 10 Years)	52
SUPPLEMENTARY INFORMATION	
Schedule of General Fund Revenues and Other Financing Sources - Budget and Actual	53
Schedule of General Fund Expenditures - Budget and Actual	54 - 55
Property Assessments	56
SINGLE AUDIT SUPPLEMENT	
Schedule of Expenditures of Federal Awards	57
Notes to Schedule of Expenditures of Federal Awards	58
Independent Auditor's Report on Compliance For Each Major Program and on Internal Control Over Compliance Required by the Uniform Guidance	59 - 60
Independent Auditor's Report on Internal Control Over Financial Reporting and on Compliance and Other Matters Based on an Audit of Financial Statements Performed in Accordance with *Government Auditing Standards*	61 - 62
Schedule of Findings and Questioned Costs	63 - 64
Schedule of Prior Audit Findings	65

Jefferson, Urian, Doane & Sterner, P.A.

A PROFESSIONAL CORPORATION • CERTIFIED PUBLIC ACCOUNTANTS

DAVID C. DOANE, CPA
CHARLES H. STERNER, JR. CPA, CVA
SHELDON L. FORNEY, CPA
JAY M. STEVENS, CPA, PFS
ROGER R. REED, CPA
ELAINE E. GRAVES, CPA
BRYAN L. HUDSON, CPA
FREDERICK A. MAST, CPA

TRUITT W. JEFFERSON
(1937 - 2016)

DAVID R. URIAN, DIRECTOR
RETIRED

INDEPENDENT AUDITOR'S REPORT

To the Honorable Mayor and Council
Town of Georgetown
Georgetown, Delaware

Report on the Financial Statements

We have audited the accompanying financial statements of the governmental activities, the business-type activities, and each major fund of the Town of Georgetown as of and for the year ended April 30, 2018, and the related notes to the financial statements, which collectively comprise the Town's basic financial statements as listed in the table of contents.

Management's Responsibility for the Financial Statements

Management is responsible for the preparation and fair presentation of these financial statements in accordance with accounting principles generally accepted in the United States of America; this includes the design, implementation, and maintenance of internal control relevant to the preparation and fair presentation of financial statements that are free from material misstatement, whether due to fraud or error.

Auditor's Responsibility

Our responsibility is to express opinions on these financial statements based on our audit. We conducted our audit in accordance with auditing standards generally accepted in the United States of America and the standards applicable to financial audits contained in *Government Auditing Standards,* issued by the Comptroller General of the United States. Those standards require that we plan and perform the audit to obtain reasonable assurance about whether the financial statements are free from material misstatement.

An audit involves performing procedures to obtain audit evidence about the amounts and disclosures in the financial statements. The procedures selected depend on the auditor's judgment, including the assessment of the risks of material misstatement of the financial statements, whether due to fraud or error. In making those risk assessments, the auditor considers internal control relevant to the entity's preparation and fair presentation of the financial statements in order to design audit procedures that are appropriate in the circumstances, but not for the purpose of expressing an opinion on the effectiveness of the entity's internal control. Accordingly, we express no such opinion. An audit also includes evaluating the appropriateness of accounting policies used and the reasonableness of significant accounting estimates made by management, as well as evaluating the overall presentation of the financial statements.

We believe that the audit evidence we have obtained is sufficient and appropriate to provide a basis for our audit opinions.

651 N. BEDFORD ST. EXT. • P.O. BOX 830 • GEORGETOWN, DE 19947-0830 • (302) 856-3900 • FAX (302) 856-3018
92 ATLANTIC AVE., SUITE D • P.O. BOX 477 • OCEAN VIEW, DE 19970 • (302) 539-5543 • FAX (302) 539-6527
107 WOLF CREEK BOULEVARD, SUITE 1 • DOVER, DE 19901 • (302) 678-1425 • FAX (302) 678-1468
WEBSITE: www.JUDS.com

Opinions

In our opinion, the financial statements referred to above present fairly, in all material respects, the respective financial position of the governmental activities, the business-type activities, and each major fund of the Town of Georgetown as of April 30, 2018, and the respective changes in financial position, and, where applicable, cash flows thereof, and the respective budgetary comparison for the General Fund for the year then ended in accordance with accounting principles generally accepted in the United States of America.

Change in Accounting Principle

As discussed in Note A to the financial statements, the Town has adopted new accounting Guidance, Governmental Accounting Standards Boards Statement (GASBS) No. 89*, Accounting for Interest Cost Incurred before the End of a Construction Period*. Our opinion is not modified with respect to this matter.

Other Matters

Required Supplementary Information

Accounting principles generally accepted in the United States of America require that the management's discussion and analysis on pages 4 through 8 and the Town's cost sharing defined benefit plans on pages 49 through 52 be presented to supplement the basic financial statements. Such information, although not a part of the basic financial statements, is required by the Governmental Accounting Standards Board, who considers it to be an essential part of financial reporting for placing the basic financial statements in an appropriate operational, economic, or historical context. We have applied certain limited procedures to the required supplementary information in accordance with auditing standards generally accepted in the United States of America, which consisted of inquiries of management about the methods of preparing the information and comparing the information for consistency with management's responses to our inquiries, the basic financial statements, and other knowledge we obtained during our audit of the basic financial statements. We do not express an opinion or provide any assurance on the information because the limited procedures do not provide us with sufficient evidence to express an opinion or provide any assurance.

Other Information

Our audit was conducted for the purpose of forming opinions on the financial statements that collectively comprise the Town of Georgetown's basic financial statements. The accompanying supplementary information on pages 53 through 56 are presented for purposes of additional analysis and are not a required part of the basic financial statements. The schedule of expenditures of federal awards is presented for purposes of additional analysis as required by Title 2 U.S. *Code of Federal Regulations* (CFR) Part 200, *Uniform Administrative Requirements, Cost Principles, and Audit Requirements for Federal Awards,* and is also not a required part of the basic financial statements.

The supplementary information and the schedule of expenditures of federal awards are the responsibility of management and were derived from and relate directly to the underlying accounting and other records used to prepare the basic financial statements. Such information has been subjected to the auditing procedures applied in the audit of the basic financial statements and certain additional procedures, including comparing and reconciling such information directly to the underlying accounting and other records used to prepare the basic financial statements or to the basic financial statements themselves, and other additional procedures in accordance with auditing standards generally accepted in the United States of America. In our opinion, the supplementary information and the schedule of expenditures of federal awards are fairly stated in all material respects in relation to the basic financial statements as a whole.

Other Reporting Required by *Government Auditing Standards*

In accordance with *Government Auditing Standards*, we have also issued our report dated October 4, 2018, on our consideration of the Town of Georgetown's internal control over financial reporting and on our tests of its compliance with certain provisions of laws, regulations, contracts, and grant agreements and other matters. The purpose of that report is to describe the scope of our testing of internal control over financial reporting and compliance and the results of that testing, and not to provide an opinion on internal control over financial reporting or on compliance. That report is an integral part of an audit performed in accordance with *Government Auditing Standards* in considering the Town of Georgetown's internal control over financial reporting and compliance.

Jefferson, Urian, Doane & Sterner, P.A.

Georgetown, Delaware
October 4, 2018

MANAGEMENT'S DISCUSSION AND ANALYSIS

THE TOWN OF GEORGETOWN

MANAGEMENT'S DISCUSSION AND ANALYSIS (MD&A)

FOR FISCAL YEAR ENDED APRIL 30, 2018

This section of the report gives an overview and analysis of the financial activity of the Town of Georgetown (the Town) for the year ended April 30, 2018.

OVERVIEW OF THE FINANCIAL STATEMENTS

Management's Discussion and Analysis introduces the Town's basic financial statements. Town of Georgetown's basic financial statements include (1) Government-wide Financial Statements, (2) Fund Financial Statements, and (3) Notes to the Financial Statements. Supplementary information, in addition to the basic financial statements, is also included.

FINANCIAL HIGHLIGHTS

GOVERNMENT-WIDE STATEMENTS

As of April 30, 2018, assets exceeded liabilities by $ 36,231,122. Of this amount, the Town had unrestricted assets of $ 1,559,807. The Town's total net position decreased by $ 493,600 during the year. The net decrease was mainly caused by lower service and grant revenues.

FUND FINANCIAL STATEMENTS

As of April 30, 2018, the Town's governmental funds reported an ending fund balance of $ 3,665,290. This increased $ 306,417 from the preceding year and was approximately 8% of budgeted expenditures.

GOVERNMENT-WIDE FINANCIAL STATEMENTS

The Government-wide Financial Statements are designed to provide readers with a broad overview of the Town's finances, in a manner similar to a private sector business. This Government-wide Financial Reporting includes two statements: the Statement of Net Position and the Statement of Activities.

The Statement of Net Position presents information on all of the Town's assets and liabilities, with the difference between the two reported as net position. Over time, increases or decreases in net position may serve as an indicator of whether the financial position of the Town of Georgetown is improving or deteriorating.

The Statement of Activities presents information showing how the Town's net position changed during the current fiscal year. Changes in net position are reported when the underlying event occurs, regardless of the timing of related cash flows. Thus, some revenues and expenses reported in this statement will not impact cash flows until future fiscal periods.

Both the Statement of Net Position and Statement of Activities account separately for governmental activities and business-type activities.

Governmental activities include General Administration, Public Safety, Planning and Zoning, and Streets and Grounds. These activities are mostly supported by taxes, user fees and operating grants.

Business-type activities include water and sewer services, funded primarily by user fees, connection fees, and impact fees.

The Government-wide Financial Statements in this report immediately follow this MD&A report.

FUND FINANCIAL STATEMENTS

The next group of financial statements is Fund Financial Statements. These statements provide additional information.

A fund is an accounting category used to maintain control over resources that have been segregated for specific activities or objectives. These help us comply with finance-related legal requirements. The Town's funds are divided into two categories: Governmental Funds and Proprietary Funds.

GOVERNMENTAL FUNDS

Governmental Funds account for essentially the same functions as Governmental Activities in the Government-wide Financial Statements. Governmental Fund Financial Statements do focus on near-term inflows and outflows of spendable resources, as well as on balances of spendable resources available at the end of the fiscal year. This information may be useful in evaluating a government's near-term financial requirements. Because of the focus of governmental funds is for the current period, it is useful to compare this information with similar information presented for governmental activities in the Government-wide Financial Statements. Readers may then better understand the long-term impact of the government's current financing decisions. The Governmental Fund Balance Sheet and Governmental Fund Statement of Revenues, Expenditures and Changes in Fund Balance include reconciliations to the Government-wide Statements. The basic financial statements include a budgetary comparison statement for the General Fund. The Town of Georgetown adopts an annual appropriated budget for its General Fund.

PROPRIETARY FUNDS

The Town of Georgetown's Proprietary Funds are solely enterprise funds that operate in a manner similar to private business enterprises. The Town uses Enterprise Funds for the water and sewer systems, which separates operating revenues and expenses from non-operating items. The operating expenses include the cost of service, administrative expenses and depreciation on capital assets.

MAJOR AND NON-MAJOR FUNDS

The Town of Georgetown does not have non-major funds. All activities are classified as Major Funds.

NOTES TO THE FINANCIAL STATEMENTS

Notes to the Financial Statements provide additional information that is essential to a reader's complete understanding of the data provided in the Government-wide and Fund Financial Statements.

REQUIRED SUPPLEMENTARY INFORMATION

The required supplementary information contains information related to our participation in two defined benefit plans for our employees.

SUPPLEMENTARY INFORMATION

The supplementary information contains detailed information regarding the General Fund budget versus actual revenues and expenditures and historical property assessments.

SINGLE AUDIT SUPPLEMENT

The Town of Georgetown received federal funding through grants and loans that require certain schedules and reports to be included in this section.

GOVERNMENT-WIDE FINANCIAL ANALYSIS

The following table is a summary of the Government-wide Statement of Net Position:

TOWN OF GEORGETOWN'S SCHEDULE OF NET POSITION
As of April 30, 2018 and 2017

	Governmental Activities		Business-type Activities		Total Government	
	2018	2017	2018	2017	2018	2017
Current and Other Assets	$ 4,749,043	$ 4,612,567	$ 3,369,387	$ 3,867,584	$ 8,118,430	$ 8,480,151
Capital Assets	8,021,238	7,318,813	35,979,956	36,799,224	44,001,194	44,118,037
Total Assets	12,770,281	11,931,380	39,349,343	40,666,808	52,119,624	52,598,188
Deferred Outflows of Resources	437,215	528,642	217,759	255,939	654,974	784,581
Current and Other Liabilities	2,353,062	1,279,799	1,930,766	2,984,533	4,283,828	4,264,332
Long-term Liabilities	312,606	506,891	11,774,371	11,746,346	12,086,977	12,253,237
Total Liabilities	2,665,668	1,786,690	13,705,137	14,730,879	16,370,805	16,517,569
Deferred Inflows of Resources	156,625	123,565	16,046	16,913	172,671	140,478
Net Position:						
Net Investment in Capital Assets	6,926,469	7,119,883	22,955,420	24,015,723	29,881,889	31,135,606
Restricted	2,405,239	2,324,670	2,384,187	2,934,346	4,789,426	5,259,016
Unrestricted	1,053,495	1,105,214	506,312	(775,114)	1,559,807	330,100
Total Net Position	$10,385,203	$10,549,767	$25,845,919	$26,174,955	$36,231,122	$36,724,722

The Governmental Activities Statement of Net Position is made up of cash, taxes receivable, restricted cash, other receivables, land improvements and other capital assets. Restricted net position consists of cash and investments, which are restricted as to their use by outside agencies and the Town ordinances. The Town borrowed $ 847,755 to finance the Town Hall Renovation projects during the year.

In the Business-type Activities, 89% of the net position is invested in the water and sewer systems. Restricted net position consists of cash and investments held by the Town for infrastructure outlays and debt service. During the year, a total of $3,285,509 of business-type activities were placed in service. The loan advances on the Town's capital projects totaled $1,325,218.

The following schedule reflects the breakdown of changes in net position for Governmental and Business-type Activities for fiscal years 2018 and 2017.

TOWN OF GEORGETOWN'S CHANGES IN NET POSITION
For the Years Ended April 30, 2018 and 2017

	Governmental Activities		Business-type Activities		Total Government	
	2018	2017	2018	2017	2018	2017
Revenues						
Program Revenues:						
Charges for Services	$ 1,179,237	$ 1,556,994	$ 3,380,922	$ 3,433,527	$ 4,560,159	$ 4,990,521
Operating Grants and Contributions	1,147,262	1,407,034	181,881	819,213	1,329,143	2,226,247
Capital Grants and Contributions	10,000	32,677	77,739	6,226	87,739	38,903
General Revenues						
Property Taxes and Penalties	1,586,634	1,565,759	-	-	1,586,634	1,565,759
Realty Transfer Taxes	246,343	228,120	-	-	246,343	228,120
Gain on Sale of Assets	10,847	-	-	-	10,847	-
Investment Income	780	838	-	-	780	838
Total Revenues	4,181,103	4,791,422	3,640,542	4,258,966	7,821,645	9,050,388
Program Expenses						
General Administration	430,781	381,195	-	-	430,781	381,195
Public Safety	2,589,662	2,480,432	-	-	2,589,662	2,480,432
Planning and Zoning	153,342	194,580	-	-	153,342	194,580
Streets and Grounds	1,545,129	1,926,204	-	-	1,545,129	1,926,204
Sewer Facility	-	-	2,379,843	2,348,759	2,379,843	2,348,759
Water Facility	-	-	1,216,488	1,281,163	1,216,488	1,281,163
Total Expenses	4,718,914	4,982,411	3,596,331	3,629,922	8,315,245	8,612,333
Increase (decrease) in Net Position before Transfers	(537,811)	(190,989)	44,211	629,044	(493,600)	438,055
Transfers	373,247	284,001	(373,247)	(284,001)	-	-
Increase in Net Position	(164,564)	93,012	(329,036)	345,043	(493,600)	438,055
Net Position - Beginning	10,549,767	10,456,755	26,174,955	25,829,912	36,724,722	36,286,667
Net Position - Ending	$ 10,385,203	$ 10,549,767	$ 25,845,919	$ 26,174,955	$ 36,231,122	$ 36,724,722

In the Governmental Activities, revenues decreased from the prior year due to the Town receiving less service revenue and intergovernmental grant revenues for street maintenance and pass-through projects and public safety grants, thereby reducing the activity related to street paving projects during the year for program expenses. Interest costs incurred for the Town Hall renovation projects are now being expensed prior to construction completion as a result of the Town's early adoption of Governmental Accounting Standards Boards Statement (GASBS) No. 89, *Accounting for Interest Cost Incurred before the End of a Construction Period.*

In the Business-type Activities, Operating Grants and Contributions decreased from the prior year due to a reduction in impact fees collected. The Town did not incur any construction interest cost for business-type activities that would affect the early implementation of the GASBS No. 89. The Capital Contributions increased due to grant receipts received from the Water Asset Management grant and Sewer Asset Management grant. Expenses were comparable to prior years for the water and the sewer funds.

FINANCIAL ANALYSIS OF THE GOVERNMENT'S FUNDS

In the General Fund, on the fund basis, the actual revenues were comparable to the budget except for transfer taxes and courthouse fees that generated $ 417,923 over the budget, intergovernmental grants that generated $ 355,008 over the budget, permits and planning and zoning fees were $ 212,081 over the budget, and miscellaneous revenues that generated $ 98,317 over the budget. The overall increase in actual revenues over budgeted revenues was $ 1,172,158 on the Fund Financial Statements. Expenses consist of General Administrative, Planning and Zoning, Public Safety, and Streets and Grounds. General Administrative disbursed more funding to the Emergency Service Fund and G.R.E.A.T. Fund than was budgeted. Public Safety paid salaries in excess of budgeted amounts; however, the employee benefit costs for Public Safety were under budget. The capital outlay budget for General Administration did not include costs related to the Town Hall Renovations for 37 and 39 The Circle. As a result, the total capital outlay for the general fund was $ 1,045,341 over budget. The capital outlay for Public Safety was $ 146,286 over the budget because it did not include costs related to new capital leases for police vehicles during the fiscal year and various public safety new technology upgrades.

The Town's Proprietary Funds provide the same type of information found in the Government-wide Financial Statements, but in more detail.

OTHER FACTORS

The Town continues to see commercial development along the DuPont Boulevard (US 113) corridor. During the latter part of FY 2017, interest in multi-family residential housing projects started to surface. This includes Phase 1 of the Oaks at Georgetown, the Village of College Park, and the former Whispering Breeze site. Georgetown continues to see an increase in medical facilities, retail, hotel, and service type offerings.

During FY 2018, the Town initiated renovations of 37 The Circle (Administrative Offices) and 39 The Circle (Town Hall). The estimated cost to complete both buildings is $1.9 million and funding is through the United States Department of Agriculture – Community Facilities (USDA-CF) program.

Additionally, the Town started street improvements along South King Street with ADA Curb Cuts and repairs being made at the intersection with East Pine Street in anticipation of a larger pavement rehabilitation project. Projects funding was through Municipal Street Aid.

BASIC FINANCIAL STATEMENTS

TOWN OF GEORGETOWN
STATEMENT OF NET POSITION
APRIL 30, 2018

	Primary Government		
	Governmental Activities	**Business-type Activities**	**Total**
ASSETS			
Cash and cash equivalents	$ 240,041	$ -	$ 240,041
Receivables:			
Taxes	35,872	-	35,872
Trash	92,348	-	92,348
Service water and sewer	-	602,111	602,111
Miscellaneous	110,362	-	110,362
Prepaid items	70,291	1,676	71,967
Due from other government agencies	128,760	68,380	197,140
Noncurrent assets:			
Loan receivable	9,000	-	9,000
Restricted assets:			
Cash and cash equivalents	3,886,099	2,629,375	6,515,474
Receivables	176,270	5,999	182,269
Investments	-	61,846	61,846
Capital assets:			
Land and construction in progress	1,561,330	1,148,867	2,710,197
Other capital assets, net of depreciation	6,459,908	34,831,089	41,290,997
TOTAL ASSETS	12,770,281	39,349,343	52,119,624
DEFERRED OUTFLOWS OF RESOURCES			
Deferred outflows related to pension	437,215	108,850	546,065
Deferred amounts on refunding	-	108,909	108,909
TOTAL DEFERRED OUTFLOWS OF RESOURCES	437,215	217,759	654,974
LIABILITIES			
Accounts payable	263,291	94,048	357,339
Accrued liabilities	57,839	85,867	143,706
Construction project deposit	593,173	-	593,173
Unearned revenue	81,101	305,042	386,143
Long-term liabilities:			
Due within one year	1,357,658	1,445,809	2,803,467
Due in more than one year	312,606	11,774,371	12,086,977
TOTAL LIABILITIES	2,665,668	13,705,137	16,370,805
DEFERRED INFLOWS OF RESOURCES	156,625	16,046	172,671
NET POSITION			
Net investment in capital assets	6,926,469	22,955,420	29,881,889
Restricted for:			
Construction and debt service	82,725	2,384,187	2,466,912
Grants, emergency services, recreation and transfer tax	2,322,514	-	2,322,514
Unrestricted	1,053,495	506,312	1,559,807
TOTAL NET POSITION	$ 10,385,203	$ 25,845,919	$ 36,231,122

The accompanying notes are an integral part of these financial statements.

TOWN OF GEORGETOWN
STATEMENT OF ACTIVITIES
FOR THE YEAR ENDED APRIL 30, 2018

		Program Revenues			Net Revenue (Expense) and Changes in Net Position		
					Primary Government		
Function/Programs	Expenses	Charges for Services	Operating Grants and Contributions	Capital Grants and Contributions	Governmental Activities	Business-type Activities	Total
PRIMARY GOVERNMENT							
GOVERNMENTAL ACTIVITIES							
General administration	$ 430,781	$ 385,731	$ 651,588	$ -	$ 606,538	$ -	$ 606,538
Public safety	2,589,662	191,061	352,893	10,000	(2,035,708)	-	(2,035,708)
Streets and grounds	1,545,129	495,457	142,781	-	(906,891)	-	(906,891)
Planning and zoning	153,342	106,988	-	-	(46,354)	-	(46,354)
TOTAL GOVERNMENTAL ACTIVITIES	4,718,914	1,179,237	1,147,262	10,000	(2,382,415)	-	(2,382,415)
BUSINESS-TYPE ACTIVITIES							
Sewer facility	2,379,843	2,026,870	148,000	36,937	-	(168,036)	(168,036)
Water facility	1,216,488	1,354,052	33,881	40,802	-	212,247	212,247
TOTAL BUSINESS-TYPE ACTIVITIES	3,596,331	3,380,922	181,881	77,739	-	44,211	44,211
TOTAL PRIMARY GOVERNMENT	$ 8,315,245	$ 4,560,159	$ 1,329,143	$ 87,739	(2,382,415)	44,211	(2,338,204)
GENERAL REVENUES							
Taxes: Property and penalties					1,586,634	-	1,586,634
Realty transfer					246,343	-	246,343
Unrestricted investment earning					780	-	780
Gain on sale of assets					10,847	-	10,847
TRANSFERS					373,247	(373,247)	-
TOTAL GENERAL REVENUES AND TRANSFERS					2,217,851	(373,247)	1,844,604
CHANGE IN NET POSITION					(164,564)	(329,036)	(493,600)
NET POSITION - BEGINNING					10,549,767	26,174,955	36,724,722
NET POSITION - ENDING					$ 10,385,203	$ 25,845,919	$ 36,231,122

The accompanying notes are an integral part of these financial statements.

TOWN OF GEORGETOWN
BALANCE SHEET - GOVERNMENTAL FUND
APRIL 30, 2018

	General Fund
ASSETS	
Cash and cash equivalents	$ 240,041
Receivables:	
Taxes	35,872
Trash	92,348
Miscellaneous	110,362
Prepaid items	70,291
Due from other government agencies	128,760
Noncurrent assets:	
Loan receivable	9,000
Restricted assets:	
Cash and cash equivalents	3,886,099
Receivables	176,270
TOTAL ASSETS	$ 4,749,043
LIABILITIES	
Accounts payable	$ 263,291
Accrued liabilities	57,839
Construction project deposit	593,173
Unearned revenue	81,101
TOTAL LIABILITIES	995,404
DEFERRED INFLOWS OF RESOURCES	
Unavailable revenues:	
Grant	47,255
Loan receivable	9,000
Property taxes	32,094
TOTAL DEFERRED INFLOWS OF RESOURCES	88,349
FUND BALANCES	
Nonspendable:	
Prepaid items	70,291
Restricted for:	
Emergency services and recreation services	316,610
Grant funds	844,567
Realty transfer tax	976,067
Assigned for:	
Health benefits	169,126
Town hall renovations	82,725
Public safety	91
Unassigned	1,205,813
TOTAL FUND BALANCES	3,665,290
TOTAL LIABILITIES, DEFERRED INFLOWS OF RESOURCES, AND FUND BALANCES	$ 4,749,043

The accompanying notes are an integral part of these financial statements.

TOWN OF GEORGETOWN
RECONCILIATION OF THE GOVERNMENTAL FUND BALANCE SHEET TO THE GOVERNMENT-WIDE STATEMENT OF NET POSITION
APRIL 30, 2018

FUND BALANCES OF GOVERNMENTAL FUND	$ 3,665,290
Amounts reported for governmental activities in the Statement of Net Position are different because:	
Capital assets used in governmental activities are not financial resources and therefore are not reported in the governmental fund statements.	8,021,238
Certain revenues are not available to pay for current period expenditures and therefore are reported as unavailable in the governmental funds.	88,349
Long-term liabilities for notes payable ($ 1,094,769), accrued compensated absences ($ 352,045), and pension liabilities ($ 223,450) are not due and payable in the current period, and accordingly, are not reported in the governmental fund financial statements. Interest and fees on long-term debt are not accrued in governmental funds, but rather are recognized as an expenditure when due.	(1,670,264)
Increases and decreases to the net pension liability that were not included in pension expense are classified as deferred outflows and deferred inflows of resources. Those items are not reported on the governmental fund financial statements.	280,590
NET POSITION OF GOVERNMENTAL ACTIVITIES	$ 10,385,203

The accompanying notes are an integral part of these financial statements.

TOWN OF GEORGETOWN
STATEMENT OF REVENUES, EXPENDITURES AND CHANGES IN FUND BALANCE - GOVERNMENTAL FUND
FOR THE YEAR ENDED APRIL 30, 2018

	General Fund
REVENUES	
Taxes and fees	$ 2,387,383
Intergovernmental	577,765
Charges for services	985,705
Fines and parking	141,598
Miscellaneous	325,521
TOTAL REVENUES	4,417,972
EXPENDITURES	
Current:	
General administration	392,607
Planning and zoning	151,364
Public safety	2,405,873
Streets and grounds	1,164,995
Debt service	62,681
Capital outlay	1,251,653
TOTAL EXPENDITURES	5,429,173
EXCESS OF REVENUES OVER (UNDER) EXPENDITURES	(1,011,201)
OTHER FINANCING SOURCES	
Loan proceeds	944,371
Transfers in, net	373,247
NET CHANGE IN FUND BALANCE	306,417
FUND BALANCE - BEGINNING	3,358,873
FUND BALANCE - ENDING	$ 3,665,290

The accompanying notes are an integral part of these financial statements.

TOWN OF GEORGETOWN
RECONCILIATION OF THE STATEMENT OF REVENUES, EXPENDITURES AND CHANGES IN FUND BALANCE OF GOVERNMENTAL FUND TO THE STATEMENT OF ACTIVITIES
FOR THE YEAR ENDED APRIL 30, 2018

NET CHANGE IN FUND BALANCE - GOVERNMENTAL FUND		$ 306,417
Governmental funds report capital outlays as expenditures. However, in the Statement of Activities the cost of those assets is allocated over their estimated useful lives and reported as depreciation expense. This is the amount by which capital outlay ($ 1,252,653) exceeded depreciation ($ 536,075) in the current period.		715,578
Revenues in the Statement of Activities that do not provide current financial resources are not reported as revenues in the funds. The net changes are as follows:		
Building fund fees	$ (191,870)	
Cost of assets sold	(13,153)	
Grants	(21,145)	
Property taxes	(7,826)	(233,994)
Debt proceeds are recognized as financing sources in governmental funds, but are not revenue in the Government-wide Statement of Activities, net of principal payments on debt and accrued interest on debt not yet due.		(895,839)
Some expenses reported in the Statement of Activities do not require the use of current financial resources and therefore are not reported as expenditures in the governmental funds. The net changes are as follows:		
Compensated absences	(40,199)	
Donations	(4,500)	
Pension expenses	(12,027)	(56,726)
CHANGE IN NET POSITION OF GOVERNMENTAL ACTIVITIES		$ (164,564)

The accompanying notes are an integral part of these financial statements.

TOWN OF GEORGETOWN
STATEMENT OF REVENUES, EXPENDITURES AND CHANGES IN FUND BALANCE - BUDGET AND ACTUAL - GENERAL FUND
FOR THE YEAR ENDED APRIL 30, 2018

	Budgeted Amounts Original and Final	Actual	Variance with Budget - Positive (Negative)
REVENUES			
Taxes and fees	$ 1,948,853	$ 2,387,383	$ 438,530
Intergovernmental	222,757	577,765	355,008
Charges for services	725,000	985,705	260,705
Fines and parking	122,000	141,598	19,598
Miscellaneous	227,204	325,521	98,317
TOTAL REVENUES	3,245,814	4,417,972	1,172,158
EXPENDITURES			
Current:			
General administration	288,626	392,607	(103,981)
Planning and zoning	136,552	151,364	(14,812)
Public safety	2,358,910	2,405,873	(46,963)
Streets and grounds	1,068,750	1,164,995	(96,245)
Debt service	9,245	62,681	(53,436)
Capital outlay	76,094	1,251,653	(1,175,559)
TOTAL EXPENDITURES	3,938,177	5,429,173	(1,490,996)
REVENUES OVER (UNDER) EXPENDITURES	(692,363)	(1,011,201)	(318,838)
OTHER FINANCING SOURCES			
Loan proceeds	-	944,371	944,371
Transfers in, net	478,757	373,247	(105,510)
NET CHANGE IN FUND BALANCE	(213,606)	306,417	520,023
FUND BALANCE - BEGINNING	3,358,873	3,358,873	-
FUND BALANCE - ENDING	$ 3,145,267	$ 3,665,290	$ 520,023

The accompanying notes are an integral part of these financial statements.

TOWN OF GEORGETOWN
STATEMENT OF NET POSITION - PROPRIETARY FUNDS
APRIL 30, 2018

	Business-type Activities - Enterprise Funds		
ASSETS	**Sewer Fund**	**Water Fund**	**Total**
CURRENT ASSETS			
Receivables, net of allowance for doubtful accounts			
Service charges	$ 285,494	$ 316,617	$ 602,111
Grants	36,937	31,443	68,380
TOTAL CURRENT ASSETS	322,431	348,060	670,491
NONCURRENT ASSETS			
Prepaid items	1,676	-	1,676
Restricted assets:			
Cash and cash equivalents	2,155,360	474,015	2,629,375
Investments	61,846	-	61,846
Receivables	4,800	1,199	5,999
Capital assets:			
Land and construction in progress	1,075,565	73,302	1,148,867
Other capital assets, net of depreciation	23,219,762	11,611,327	34,831,089
TOTAL NONCURRENT ASSETS	26,519,009	12,159,843	38,678,852
TOTAL ASSETS	26,841,440	12,507,903	39,349,343
DEFERRED OUTFLOWS OF RESOURCES			
Deferred outflows related to pension	55,284	53,566	108,850
Deferred amounts on refunding	46,720	62,189	108,909
TOTAL DEFERRED OUTFLOWS OF RESOURCES	102,004	115,755	217,759
LIABILITIES			
CURRENT LIABILITIES			
Accounts payable	77,868	16,180	94,048
Accrued liabilities	56,696	29,171	85,867
Unearned revenue	305,042	-	305,042
Current portion of long-term liabilities	790,657	655,152	1,445,809
TOTAL CURRENT LIABILITIES	1,230,263	700,503	1,930,766
LONG-TERM LIABILITIES, LESS CURRENT PORTION	6,596,612	5,177,759	11,774,371
TOTAL LIABILITIES	7,826,875	5,878,262	13,705,137
DEFERRED INFLOWS OF RESOURCES	7,219	8,827	16,046
NET POSITION			
Net investment in capital assets	17,025,211	5,930,209	22,955,420
Restricted for:			
Construction and debt service	1,976,323	407,864	2,384,187
Unrestricted	107,816	398,496	506,312
TOTAL NET POSITION	$ 19,109,350	$ 6,736,569	$ 25,845,919

The accompanying notes are an integral part of these financial statements.

TOWN OF GEORGETOWN
STATEMENT OF REVENUES, EXPENSES AND CHANGES IN FUND NET POSITION - PROPRIETARY FUNDS
FOR THE YEAR ENDED APRIL 30, 2018

	Business-type Activities - Enterprise Funds		
	Sewer Fund	Water Fund	Total
OPERATING REVENUES			
Charges for services	$ 1,966,891	$ 1,327,559	$ 3,294,450
Other operating revenue	39,164	11,748	50,912
TOTAL OPERATING REVENUES	2,006,055	1,339,307	3,345,362
OPERATING EXPENSES			
Chemicals	31,098	56,446	87,544
Depreciation	844,940	285,986	1,130,926
Employee benefits	116,022	104,510	220,532
Gasoline and oil	5,832	1,828	7,660
Insurance	31,804	18,918	50,722
Lease expense	13,081	-	13,081
Maintenance and repairs	144,287	207,756	352,043
Payroll taxes	28,031	25,825	53,856
Pension expense	25,914	24,331	50,245
Professional services	266,588	5,472	272,060
Salaries	364,951	332,610	697,561
Sludge disposal fees	84,600	-	84,600
Supplies	20,390	3,547	23,937
Telephone	3,245	3,092	6,337
Utilities	177,432	60,957	238,389
TOTAL OPERATING EXPENSES	2,158,215	1,131,278	3,289,493
OPERATING INCOME (LOSS)	(152,160)	208,029	55,869
NON-OPERATING REVENUES (EXPENSES)			
Impact fees, net	148,000	33,881	181,881
Investment income	778	224	1,002
Loss on disposal of assets	-	(4,006)	(4,006)
Penalties	20,037	14,521	34,558
Interest expense	(221,628)	(81,204)	(302,832)
TOTAL NON-OPERATING REVENUES (EXPENSES)	(52,813)	(36,584)	(89,397)
INCOME (LOSS) BEFORE TRANSFERS	(204,973)	171,445	(33,528)
CAPITAL GRANTS AND CONTRIBUTIONS	36,937	40,802	77,739
TRANSFERS OUT	(93,779)	(279,468)	(373,247)
CHANGE IN NET POSITION	(261,815)	(67,221)	(329,036)
NET POSITION - BEGINNING	19,371,165	6,803,790	26,174,955
NET POSITION - ENDING	$ 19,109,350	$ 6,736,569	$ 25,845,919

The accompanying notes are an integral part of these financial statements.

TOWN OF GEORGETOWN
STATEMENT OF CASH FLOWS - PROPRIETARY FUNDS
FOR THE YEAR ENDED APRIL 30, 2018

	Business-type Activities - Enterprise Funds		
	Sewer Fund	Water Fund	Total
CASH FLOWS FROM OPERATING ACTIVITIES			
Receipts from customers	$ 1,913,857	$ 1,273,414	$ 3,187,271
Payments to suppliers for goods and services	(843,750)	(368,479)	(1,212,229)
Payments to employees for services	(527,019)	(488,592)	(1,015,611)
Other operating receipts	39,164	11,748	50,912
NET CASH FLOWS FROM OPERATING ACTIVITIES	582,252	428,091	1,010,343
CASH FLOWS FROM NONCAPITAL FINANCING ACTIVITIES			
Transfers to other funds, net	(93,779)	(279,468)	(373,247)
CASH FLOWS FROM CAPITAL AND RELATED FINANCING ACTIVITIES			
Bond and loan proceeds	-	1,325,218	1,325,218
Acquisition of capital assets	(86,264)	(1,409,915)	(1,496,179)
Retirement of bonds and related costs	(651,818)	(422,477)	(1,074,295)
Impact fees	414,900	64,101	479,001
Intergovernmental grant - capital	-	9,359	9,359
Interest paid	(219,146)	(74,128)	(293,274)
NET CASH FLOWS FROM CAPITAL AND RELATED FINANCING ACTIVITIES	(542,328)	(507,842)	(1,050,170)
CASH FLOWS FROM INVESTING ACTIVITIES			
Proceeds from investments	9,234	-	9,234
Investment income and penaltie	20,815	14,745	35,560
NET CASH FLOWS FROM INVESTING ACTIVITIES	30,049	14,745	44,794
NET DECREASE IN CASH AND CASH EQUIVALENTS	(23,806)	(344,474)	(368,280)
CASH AND CASH EQUIVALENTS - BEGINNING	2,179,166	818,489	2,997,655
CASH AND CASH EQUIVALENTS - ENDING	$ 2,155,360	$ 474,015	$ 2,629,375
CASH AND CASH EQUIVALENTS AS PRESENTED IN THE ACCOMPANYING STATEMENTS OF NET POSITION			
Restricted cash and cash equivalents	$ 2,155,360	$ 474,015	$ 2,629,375

The accompanying notes are an integral part of these financial statements.

TOWN OF GEORGETOWN
STATEMENT OF CASH FLOWS - PROPRIETARY FUNDS - CONTINUED
FOR THE YEAR ENDED APRIL 30, 2018

	Business-type Activities - Enterprise Funds		
	Sewer Fund	Water Fund	Total
RECONCILIATION OF OPERATING INCOME TO NET CASH FLOWS FROM OPERATING ACTIVITIES			
Operating income (loss)	$ (152,160)	$ 208,029	$ 55,869
Adjustments to reconcile operating income to net cash flows from operating activities:			
Depreciation	844,940	285,986	1,130,926
Changes in assets, deferred outflows and liabilities:			
Receivables	(60,926)	(54,145)	(115,071)
Prepaid items	7,014	-	7,014
Accounts payable and accrued liabilities	(65,118)	(12,349)	(77,467)
Net change in pension liabilities	610	570	1,180
Unearned revenue	7,892	-	7,892
NET CASH FLOWS FROM OPERATING ACTIVITIES	$ 582,252	$ 428,091	$ 1,010,343

The accompanying notes are an integral part of these financial statements.

NOTE A - SUMMARY OF SIGNIFICANT ACCOUNTING POLICIES

The Town of Georgetown, Delaware (the Town) was incorporated in 1791 under the provisions of the State of Delaware. The Town operates under a Mayor-Council form of government and provides the following services: public safety, streets and grounds, planning and zoning, water and sewer service, and general administrative services.

The Town's financial statements are prepared in accordance with accounting principles generally accepted in the United States of America (GAAP) as applicable to governmental units. The Governmental Accounting Standards Board (GASB) is responsible for establishing GAAP for state and local governments through its pronouncements (Statements and Interpretations). The more significant accounting policies established in GAAP and used by the Town are discussed below.

1. Reporting Entity

The accompanying financial statements include police, streets, water and sewer service, recreation and general administrative services that are legally controlled by or dependent on the Town Council (the primary government). The Town's financial reporting entity is required to consist of all organizations for which the Town is financially accountable or for which there is a significant relationship.

2. Basic Financial Statements - Government-wide Statements

The Town's basic financial statements include both government-wide (reporting the Town as a whole) and fund financial statements. Both the government-wide and fund financial statements categorize primary activities as either governmental or business-type. The Town's governmental activities consist of general administration, public safety, recreation, and street maintenance. The Town's water and sewer services are classified as business-type activities.

In the government-wide statement of net position, both the governmental and business-type activities columns (a) are presented on a consolidated basis by column, and (b) are reported on a full accrual, economic resource basis, which recognizes all long-term assets and receivables as well as long-term debt and obligations.

The government-wide statement of activities reports both the gross and net cost of each of the Town's functions and business-type activities. The functions are also supported by general government revenues (property taxes, certain intergovernmental revenues, fines, permits and charges, etc.). The statement of activities reduces gross expenses (including depreciation) by related program revenues, operating and capital grants. Program revenues must be directly associated with the function or a business-type activity. Operating grants include operating specific and discretionary (either operating or capital) grants while the capital grants column reflects capital-specific grants. Direct expenses are those that are clearly identifiable with a specific function. The net costs (by function or business-type activity) are normally covered by general revenue (property taxes, interest income, etc.).

This government-wide focus is more on the sustainability of the Town as an entity and the change in the Town's net position resulting from the current year's activities.

NOTE A - SUMMARY OF SIGNIFICANT ACCOUNTING POLICIES - CONTINUED

3. Basic Financial Statements - Fund Financial Statements

The financial transactions of the Town are reported in individual funds in the fund financial statements. Each fund is accounted for by providing a separate set of self-balancing accounts that comprises its assets, liabilities, fund equity, revenues and expenditures/expenses. The various funds are reported by generic classification within the financial statements.

The following fund types are used by the Town:

Governmental Fund

The focus of the governmental fund's measurement (in the fund statements) is upon determination of financial position and changes in financial position (sources, uses and balances of financial resources) rather than upon net income. The following is a description of the governmental fund of the Town:

General fund is the general operating fund of the Town. It is used to account for all financial resources except those required to be accounted for in another fund.

Proprietary Funds

The focus of proprietary fund measurement is upon determination of operating income, changes in net position, financial position and cash flows. The accounting principles generally accepted in the United States of America applicable are those similar to businesses in the private sector.

Proprietary funds are required to be used to account for operations for which a fee is charged to external users for goods or services and the activity (a) is financed with debt that is solely secured by a pledge of the net revenues, (b) has third party requirements that the cost of providing services, including capital costs, be recovered with fees and charges or (c) establishes fees and charges based on a pricing policy designed to recover similar costs. The following is a description of the proprietary funds of the Town:

Enterprise funds are used to account for the provision of water and sewer services to customers in the Town's Water and Sewer Districts. Activities of the enterprise funds include administration, operations and maintenance of the water and sewer system, and billing and collection activities.

Proprietary funds distinguish operating revenues and expenses from non-operating items. Operating revenues and expenses generally result from providing services and producing and delivering goods in connection with a proprietary fund's principal ongoing operations. The principal operating revenues are charges to customers for providing services. Operating expenses include the cost of services, administrative expenses and depreciation on capital assets. All revenues and expenses not meeting the above criteria are reported as non-operating revenues and expenses.

NOTE A - SUMMARY OF SIGNIFICANT ACCOUNTING POLICIES - CONTINUED

3. Basic Financial Statements - Fund Financial Statements - Continued

Major and Nonmajor Funds

The funds of the financial reporting entity are further classified as major or nonmajor. The emphasis in fund financial statements is on the major funds in either the governmental or business-type activities categories. Nonmajor funds by category are summarized into a single column. GASBS No. 34 sets forth minimum criteria for the determination of major funds. The Town does not have a nonmajor fund.

4. Basis of Accounting/Measurement Focus

Measurement focus refers to what is being measured; basis of accounting refers to when revenues and expenditures are recognized in the accounts and reported in the financial statements. Basis of accounting relates to the timing of the measurement made, regardless of the measurement focus applied.

The government-wide statements and fund financial statements for proprietary funds are reported using the economic resources measurement focus and the accrual basis of accounting. The economic resources measurement focus means all assets and liabilities (whether current or non-current) are included on the statement of net position and the operating statements present increases (revenues) and decreases (expenses) in net total assets. Under the accrual basis of accounting, revenues are recognized when earned, including unbilled water and sewer services, which are accrued. Expenses are recognized at the time the liability is incurred. Subsidies and grants to proprietary funds, which finance either capital or current operations, are reported as non-operating revenue.

Governmental fund financial statements are reported using the current financial resources measurement focus and are accounted for using the modified accrual basis of accounting. Under the modified accrual basis of accounting, revenues are recognized when susceptible to accrual; i.e., when they become both measurable and available. "Measurable" means the amount of the transaction can be determined and "available" means collectible within the current period or soon enough thereafter to be used to pay liabilities of the current period. The Town considers property taxes as available if they are collected within 60 days after year-end. Expenditures are recorded when the related fund liability is incurred. However, debt service expenditures, except for interest payable accrued at the debt issuance date for which cash is received with the debt proceeds, as well as expenditures related to compensated absences are recorded only when payment has matured and will be payable shortly after year-end. The revenues susceptible to accrual are property taxes, annexation fees, charges for service, interest income and intergovernmental revenues.

NOTE A - SUMMARY OF SIGNIFICANT ACCOUNTING POLICIES - CONTINUED

5. Cash and Cash Equivalents

The Town has defined cash and cash equivalents to include cash on hand, demand deposits and all liquid investments (including restricted assets) with a maturity of three months or less when purchased. Restricted cash mainly consists of amounts held by the Town that are sourced from grant programs, retirement, health and impact fee funds.

6. Receivables

Receivables of other than miscellaneous are reported at their gross value. All service and property tax receivables are considered fully collectible. Miscellaneous receivables are reported net of a reserve for bad debts. As of April 30, 2018, the Town determined it does not need a reserve for the current period.

7. Capital Assets

Equipment purchased or acquired with an original cost of $ 5,000 or more, and land improvements, buildings, storm drains, and sewer and water infrastructure purchased or acquired with an original cost of $ 25,000 or more are reported at historical cost or estimated historical cost. Capital assets are reviewed on an ongoing basis for impairment whenever events or changes in circumstances indicate that the related carrying amount may not be recoverable. When required, impairment losses on assets to be held and used are recognized based on the excess of the asset's carrying amount over the fair value of the asset. Contributed assets are reported at fair market value as of the date received. Additions, improvements and other capital outlays that significantly extend the useful life of an asset are capitalized.

The Town has elected to only report infrastructure as capital assets if acquired after May 1, 2004. Other costs incurred for repairs and maintenance are expensed as incurred. Depreciation on all assets is provided on the straight-line basis over the following estimated useful lives:

Sewer and water infrastructure	5 - 50 years
Streets and storm drains	40 years
Buildings and improvements	7 - 40 years
Machinery and equipment	3 - 10 years

NOTE A - SUMMARY OF SIGNIFICANT ACCOUNTING POLICIES - CONTINUED

8. Unearned Revenue

Unearned income represents monies held or currently owed to the Town that will be recognized as revenue in future periods.

9. Investments

All investments are stated at fair value. Fair values are determined by quoted market prices, where available. Restricted investments represent amounts held by the Town for construction and debt service.

10. Deferred Outflows/Inflows of Resources

In addition to assets, the governmental fund balance sheet and statement of net position will sometimes report a separate section for deferred outflows of resources. This separate financial statement element, deferred outflows of resources, represents a consumption of net position that applies to a future period(s) and so will not be recognized as an outflow of resources (expense/expenditure) until then. The government-wide statements for governmental activities and business-type activities reported decreases in its net pension liability that were not included in its pension expense as deferred outflows of resources. Also, the Town's pension contributions subsequent to the measurement date of the net pension liability are reported as deferred outflows of resources. The business-type activities also include deferred outflows related to a prior year refunding of long-term debt.

In addition to liabilities, the governmental fund balance sheet and statement of net position will sometimes report a separate section for deferred inflows of resources. This separate financial statement element, deferred inflows of resources, represents an acquisition of net position that applies to a future period(s) and so will not be recognized as an inflow of resources (revenue) until that time. The Town has the following items that arise under the accrual and modified accrual basis of accounting that qualify for reporting in this category. For both governmental activities and business-type activities, the Town reported increases in its net pension liability that were not included in its pension expense as deferred inflows of resources. In addition, unavailable revenue is reported in the governmental fund balance sheet. The governmental funds report unavailable revenues from annexation fees, property taxes, grant revenue, and other receivables. These amounts are deferred and recognized as an inflow of resources in the period that the amounts become available.

NOTE A - SUMMARY OF SIGNIFICANT ACCOUNTING POLICIES - CONTINUED

11. Equity Classifications

Government-wide and Proprietary Fund Net Position

Net position is classified and displayed in three components:

a. Net investment in capital assets - Consists of capital assets, net of accumulated depreciation and reduced by the outstanding balances of any bonds, mortgages, notes, or other borrowings that are attributable to the acquisition, construction, or improvement of those assets.
b. Restricted net position - Consists of net position with constraints placed on the use either by (1) external groups such as creditors, grantors, contributors or laws or regulations of other governments; or (2) law through constitutional provisions or enabling legislation.
c. Unrestricted net position - All other net position that do not meet the definition of "restricted" or "net investment in capital assets."

Governmental Fund Balances

In the governmental fund financial statements, fund balances are reported using five classifications based on the constraints imposed on the use of these resources. The nonspendable fund balance classification includes amounts that cannot be spent because they are either (1) not in spendable form such as prepaid items or inventories; or (2) legally or contractually required to be maintained intact.

The spendable portion of the fund balance comprises the remaining four classifications:

a. Restricted fund balance - This classification reflects the constraints imposed on resources either (1) externally by creditors, grantors, contributors, or laws or regulations of other governments; or (2) imposed by law through constitutional provisions or enabling legislation.
b. Committed fund balance - These amounts can only be used for specific purposes pursuant to constraints imposed by formal resolutions of the Town Council, the government's highest level of decision making authority. Those committed amounts cannot be used for any other purpose unless the Town Council removes the specified use by taking the same type of action imposing the commitment. This classification also includes contractual obligations to the extent that existing resources in the fund have been specifically committed for use in satisfying those contractual requirements.
c. Assigned fund balance - This classification reflects the amounts constrained by the Town's "intent" to be used for specific purposes, but are neither restricted nor committed. The Town Manager has the authority to assign amounts to be used for specific purposes.
d. Unassigned fund balance - This fund balance is the residual classification for the general fund.

NOTE A - SUMMARY OF SIGNIFICANT ACCOUNTING POLICIES - CONTINUED

11. Equity Classifications - Continued

Use of Restricted Resources

It is the Town's policy to maintain a diversified and stable revenue stream to protect it from problematic fluctuations in any single revenue source and provide stability to ongoing services. The Town's policy is to segregate restricted resources for both restricted and assigned funds. Town Council specifically authorizes expenditures from those restricted resources and they are approved on a transaction-by-transaction basis in accordance with the specified provisions imposed by those resources. When an expenditure is incurred for purposes for which both nonsegregated restricted and unrestricted net position are available, it is the policy of the Town to consider nonsegregated restricted net position to have been reduced first.

12. Property Assessment

The Town's property tax year runs from May 1 to April 30. Property taxes are recorded and attached as an enforceable lien on property on May 31, the date levied. Taxes are payable under the following terms: May 1 through May 31, face amount; after May 31, a 1.5% penalty per month is charged on the unpaid balance due. Property taxes are recognized as revenue in the budget year for which they are levied.

13. Compensated Absences

Employees are granted vacation and sick leave in varying amounts. In the event of termination, an employee is paid for accumulated vacation days. In the event of retirement, an employee is paid for accumulated vacation days, and dependent on years of service could be paid part or all of sick leave accumulated. The Town accrues accumulated unpaid vacation and sick leave when earned (or estimated to be earned) by the employee. Sick leave is only payable to an employee at retirement and is accrued once an employee attains ten years of Town service. The governmental funds compensated absences are maintained separately and represent a reconciling item between the fund and government-wide presentations.

14. Interfund Activity

Interfund activity is reported as either loans or transfers. Loans are reported as interfund receivables and payables as appropriate and are subject to elimination upon consolidation. All other interfund transactions are treated as transfers and are not required to be repaid by the funds. Transfers between governmental or proprietary funds are netted as part of the reconciliation to the government-wide financial statements. Transferred funds are used for operational purposes by the recipient fund. The general fund received $ 93,779 and $ 279,468 of net transfers from the sewer and water funds, respectively, during the year.

NOTE A - SUMMARY OF SIGNIFICANT ACCOUNTING POLICIES - CONTINUED

15. Budgets and Budgetary Accounting

The budget in these financial statements is presented on a basis consistent with accounting principles generally accepted in the United States of America. Final budgeted amounts are as amended at April 30, 2018. Unexpected appropriations lapse at year end.

Prior to March 1, the Town Manager, in conjunction with the Finance Officer, distributes budget request forms to each department.

These budgets are prepared by March 1. The Town Manager, with the assistance of the Finance Officer, then develops an annual operating budget, using these department budgets to evaluate the priority and costs of various services. The recommended annual operating budget is then presented to Council by the Town Manager.

The Council legally adopts an annual budget not later than April 30 for the subsequent year.

16. Use of Estimates

The preparation of financial statements in conformity with accounting principles generally accepted in the United States of America requires management to make estimates and assumptions that affect the reported amounts of assets and liabilities and disclosure of contingent assets and liabilities at the date of the financial statements and the reported amounts of revenues and expenditures/expenses during the reporting period. Actual results could differ from these estimates.

17. Interest Costs

In the beginning of fiscal year 2018, the Town implemented GASB Statement No. 89, *Accounting for Interest Cost Incurred before the End of a Construction Period,* which is an early adoption of a new accounting guidance as described later in Note A, Implementation of New Statements. A prior period adjustment was not needed as a result of the Town adopting this standard. This statement requires that interest cost incurred before the end of a construction period be recognized as an expenditure / expense in the period in which the cost is incurred for both the fund financial statements and the government-wide financial statements. Interest expense totaling $ 9,021 was expensed this year related to the Town Hall renovation project for the governmental activities. Interest expensed in the business-type activities totaled $ 302,832 for the year.

NOTE A - SUMMARY OF SIGNIFICANT ACCOUNTING POLICIES - CONTINUED

18. Pensions

For purposes of measuring the net pension liability and deferred outflows/inflows of resources related to pensions and pension expenses, information about the fiduciary net position of the Delaware Public Employees' Retirement System (DPERS) plans (Plans) and additions to/deductions from the Plans' fiduciary net positions have been determined on the same basis as they are reported by DPERS, which is an accrual basis of accounting. For this purpose, benefit payments (including refunds of employee contributions) are recognized when due and payable in accordance with the benefit terms within the government-wide statements. Investments are reported at fair value. Under the modified accrual basis of accounting, the Town's proportionate share of the collective net pension liability (asset) is recognized to the extent the liability (asset) is normally expected to be liquidated with expendable available financial resources. As a result, net pension liability (asset), deferred outflows/inflows of resources, and pension expense for government-wide balances represent a reconciling item between the fund and government-wide presentations. Town employees who are non-police officers participate in DPERS' County & Municipal Other Employees' Pension Plan. Town employees who are police officers participate in the DPERS' County & Municipal Police and Firefighters' Pension Plan. Both Plans are described in Note F.

19. Implementation of New Statements

Beginning in fiscal year 2018, the Town implemented the following statements:

GASBS No. 89, *Accounting for Interest Cost Incurred before the End of a Construction Period.* This statement establishes accounting requirements for interest cost incurred before the end of a construction period. Such interest cost includes all interest that have been previously capitalized. This Statement requires that interest cost incurred before the end of a construction period be recognized as an expense in the period in which the cost is incurred for financial statements prepared using the economic resources measurement focus (accrual basis accounting). As a result, interest cost will not be included in the cost of a capital asset reported in a business-type activity. In addition, this statement also requires financial statements prepared using the current financial resources measurement focus (modified-accrual basis accounting) to recognize an expenditure for interest cost incurred before the end of a construction period for the proprietary funds for governmental fund accounting principles.

NOTE B - DEPOSITS AND INVESTMENTS

All deposits are in various financial institutions and are carried at cost. Transactions are made directly with the banks and securities dealers. At April 30, 2018, the carrying amount of the Town's deposits was $ 6,754,515 and the bank balance was $ 6,843,418. Of the bank balance, $ 1,346,277 was insured by federal depository insurance, $ 5,300,821 was insured by pledged collateral and $ 196,320 was uninsured and uncollateralized at year end. The Town's policy is to obtain additional collateral on balances held by financial institutions.

NOTE B - DEPOSITS AND INVESTMENTS - CONTINUED

Custodial Credit Risk - Custodial credit risk is the risk that, in the event of the failure of a depository financial institution, the Town will not be able to recover deposits or will not be able to recover collateral securities that are in the possession of an outside party. In regards to investments, custodial credit risk is in the event of the failure of the counterparty to a transaction, a government will not be able to recover the value of investment or collateral securities that are in the possession of an outside party. The Town does not have a formal policy to address custodial credit risks for deposits and investments.

Interest Rate Risk - Interest rate risk is the risk that changes in interest rates will adversely affect the fair value of the Town's investment. The Town's primary objective of its investment activities is the safety of principal in order to mitigate interest rate risk. The Town does not limit investment maturities as a means of managing its exposure to fair value losses arising from increasing interest rates. Investments in U.S. government securities earn interest at a stated fixed rate and are normally held until maturity when the full principal and interest are paid to the Town.

Credit Risk - Credit risk is the risk that an issuer or other counterparty to an investment will not fulfill its obligations. The Town stresses safety of principal as investments are made with judgment and care. U.S. government securities are not considered to have credit risk and, therefore, their credit risk is not disclosed. Mortgage investments have an AAA credit rating at year end.

Concentration of Credit Risk - Concentration of credit risk is the risk of loss attributed to the magnitude of investment in a single issuer. The Town has no formal policy to address the concentration of credit risk attributed to a single issuer.

Fair Value Hierarchy - Investments, including derivative instruments that are not hedging derivatives, are measured at fair value on a recurring basis. Recurring fair value measurements are those that Governmental Accounting Standards Board (GASB) Statements require or permit in the statement of net position. The Town categorizes its fair value measurements within the fair value hierarchy established by accountings principles generally accepted by the United States of America (GAAP). The hierarchy is based on the valuation inputs used to measure fair value of assets. Level 1 inputs are quoted prices in an active market for identical assets. Level 2 inputs are significant other observable inputs. Finally, Level 3 inputs are significant unobservable inputs.

The Town's investments as detailed below totaling $ 61,846 for U.S. Treasuries ($ 23,651), Federal Home Loan Mortgage Corporation ($ 22,952) and Federal National Mortgage Association ($ 15,243) are classified as Level 2 inputs of the fair value hierarchy. These investments are valued using matrix pricing techniques maintained by various pricing vendors. Matrix pricing is used to value securities based on the securities' relationship to benchmark quoted prices. Fair value is defined as the quoted market value on the last trading day of the period. These prices are obtained from various pricing sources by the Town's custodian bank.

NOTE B - DEPOSITS AND INVESTMENTS - CONTINUED

The Town has authorized the following investments:

> Bonds or other obligations of which the faith and credit of the United States of America are pledged; obligations of federal governmental agencies issued pursuant to Acts of Congress; repurchase agreements that are secured by any bond or other obligation for the payment of which the faith and credit of the United States are pledged; certificates of deposit and other evidences of deposit of financial institutions; money market mutual funds regulated by the Securities and Exchange Commission and whose portfolios consist of dollar-denominated securities; and local government investment pools administered by the State of Delaware.

The Town had the following investments at April 30, 2018:

		Investment Maturities (in Years)			
Investment Type	Fair Value	Less than 1	1 - 5	6 - 10	More than 10
U.S. Treasuries	$ 23,651	$ -	$ -	$ -	$ 23,651
Federal Home Loan Mortgage Corporation	22,952	2,045	165	1,132	19,610
Federal National Mortgage Association	15,243	-	389	133	14,721
Total Investments	$ 61,846	$ 2,045	$ 554	$ 1,265	$ 57,982

Reconciliation of cash and investments to the government-wide statement of net position:

Cash on hand	$ 1,000
Carrying amount of deposits	6,754,515
Carrying amount of investments	61,846
TOTAL	$ 6,817,361
Cash and cash equivalents	$ 240,041
Cash and cash equivalents - restricted	6,515,474
Investments - restricted	61,846
TOTAL	$ 6,817,361

NOTE C - CAPITAL ASSETS

Capital asset activity for the year ended April 30, 2018 was as follows:

	Balance at April 30, 2017	Increases	Decreases	Balance at April 30, 2018
Governmental Activities:				
Capital assets, not being depreciated:				
Land and parks	$ 395,068	$ -	$ -	$ 395,068
Construction in progress	114,589	1,051,673	-	1,166,262
Total capital assets, not being depreciated	509,657	1,051,673	-	1,561,330
Other capital assets:				
Buildings and improvements	1,497,653	-	13,079	1,484,574
Equipment	1,721,230	199,980	185,840	1,735,370
Streets and storm drains	7,956,631	-	-	7,956,631
Total other capital assets	11,175,514	199,980	198,919	11,176,575
Less accumulated depreciation for other capital assets				
Building and improvements	1,083,004	37,505	12,148	1,108,361
Equipment	1,196,406	149,767	173,618	1,172,555
Streets and storm drains	2,086,948	348,803	-	2,435,751
Total accumulated depreciation	4,366,358	536,075	185,766	4,716,667
Other capital assets, net	6,809,156	(336,095)	13,153	6,459,908
Governmental Activities Capital Assets, Net	$ 7,318,813	$ 715,578	$ 13,153	$ 8,021,238

The Town entered into a five-year capital lease for certain vehicles totaling $ 125,936, $ 18,308, and $ 98,116 during the fiscal year ended April 30, 2016, 2017, and 2018, respectively. These vehicles have been capitalized and depreciated under equipment for governmental activities. The future minimum lease payments to Ford Motor Credit and Fulton Bank, N.A. for these capital leases are detailed in Note E under governmental activities.

NOTE C - CAPITAL ASSETS - CONTINUED

	Balance at April 30, 2017	Increases	Decreases	Balance at April 30, 2018
Business-type Activities:				
Capital assets, not being depreciated:				
Land	$ 1,071,128	$ -	$ -	$ 1,071,128
Construction in progress	3,047,584	213,825	3,183,670	77,739
Total capital assets, not being depreciated	4,118,712	213,825	3,183,670	1,148,867
Other capital assets:				
Plant equipment and extensions	51,587,964	3,285,509	65,434	54,808,039
Less accumulated depreciation for other capital assets	18,907,452	1,130,926	61,428	19,976,950
Other capital assets, net	32,680,512	2,154,583	4,006	34,831,089
Business-type Activities Capital Assets, Net	$ 36,799,224	$ 2,368,408	$ 3,187,676	$ 35,979,956

Depreciation expense was charged to functions as follows:

Governmental Activities:	
General government	$ 21,275
Public safety	128,080
Streets and grounds	386,720
Total Governmental Activities Depreciation Expense	$ 536,075
Business-type Activities:	
Sewer	$ 844,940
Water	285,986
Total Business-type Activities Depreciation Expense	$ 1,130,926

NOTE D - PROPERTY TAXES

Taxes are levied on May 1 and a lien attaches to the property on May 31. Taxes are levied on November 1 for increased property valuations to that date at one-half the tax rate. The Town bills and collects its own property taxes. The tax rate for the year ended April 30, 2018 was $ 3.17 per $ 100 of assessed valuation for all real property and improvements, except for utility poles and wires, which were assessed at $ 3.69 per $ 100 of assessed valuation, with a total taxable valuation of $ 48,860,666. Real property and improvements that are exempt from taxation due to State, Town or other tax-exempt ownership total $ 15,378,705.

NOTE E - GENERAL OBLIGATION BONDS AND NOTES PAYABLE

Included in the proprietary fund are the following bonds at April 30, 2018.

	Business-type
Bond payable to the United States of America, interest at 3.25%, principal and interest payments of $ 4,592 are payable quarterly until 2039, general obligation of the Town.	$ 284,983
Bond payable to the United States of America, Department of Agriculture, Rural Utilities Service, interest at 4.5%, principal and interest payments of $ 17,626 are payable quarterly until 2043, general obligation of the Town.	1,060,058
Bond payable to the State of Delaware, interest at 2.66%, principal and interest payments of $ 154,995 are payable semi-annually until 2026, general obligation of the Town.	2,344,408
Water and Sewer bonds, Series 2011A, issued August 17, 2011, interest ranges from 1% to 4%, variable semi-annual payments at November 15 and May 15 until 2021, general obligation of the Town.	3,235,000
Bond payable to the United States of America, Department of Agriculture, Rural Utilities Service, interest at 2.125%, principal and interest payments of $ 14,761 are payable quarterly until 2052, general obligation of the Town.	1,394,444

NOTE E - GENERAL OBLIGATION BONDS AND NOTES PAYABLE - CONTINUED

	Business-type
Bond payable to the State of Delaware, interest at 0%, with loan forgiveness at completion of project, general obligation of the Town. Total bonds authorized were $ 3,800,000. Total advanced $ 3,547,789.	$ 3,547,789
Bond payable to the State of Delaware, interest at 2.39%, semi-annual payments until 2029, general obligation of the Town. Total bonds authorized were $ 556,500. Total advanced $ 93,062, remaining funds not utilized.	54,174
Bond payable to the United States of America, Department of Agriculture, Rural Utilities Service, interest at 2.25%, principal and interest payments of $ 8,496 are payable quarterly until 2050, general obligation of the Town.	776,539
Bond payable to the State of Delaware, interest at 2%, semi-annual payments until 2030, general obligation of the Town. Total bonds authorized were $ 490,000. Total advanced $ 398,795, remaining funds not utilized.	291,712
TOTAL	12,989,107
ADD: Unamortized bond premium	35,429
TOTAL BOND INDEBTEDNESS	$ 13,024,536

The total debt service payments for the ensuing years are as follows:

	Business-type Activities - General Obligation		
Years Ending April 30	Principal	Interest	Total
2019	$ 1,353,250	$ 257,429	$ 1,610,679
2020	1,258,745	219,732	1,478,477
2021	1,283,594	187,663	1,471,257
2022	1,323,722	153,685	1,477,407
2023	524,138	131,119	655,257
2024 - 2028	2,318,510	494,898	2,813,408
2029 - 2033	1,285,005	345,701	1,630,706
2034 - 2038	1,315,722	247,703	1,563,425
2039 - 2043	1,367,254	136,255	1,503,509
2044 - 2048	712,446	51,618	764,064
2049 - 2053	246,721	8,655	255,376
TOTAL	$ 12,989,107	$ 2,234,458	$ 15,223,565

NOTE E - GENERAL OBLIGATION BONDS AND NOTES PAYABLE - CONTINUED

At April 30, 2018, governmental activities notes payable were as follows:

	Governmental
Note payable to PNC Bank, interest only paid monthly until 2019 maturity at 2.39%, interim financing and general obligation of the Town to not exceed $ 1,925,000. Total advanced $ 957,977.	$ 957,977
Notes payable to Ford Motor Credit, interest payable at 5.45%, 5.95%, and 6.45%, principal and interest payments due annually until 2020, general obligation of the Town.	60,759
Notes payable to Fulton Bank, N.A., interest payable at 3.28%, principal and interest payments due annually until 2022, general obligation of the Town.	76,033
TOTAL NOTES PAYABLE	$ 1,094,769

The total debt service payments for the ensuing years are as follows:

	Governmental Activities - General Obligation		
Years Ending April 30	Principal	Interest	Total
2019	$ 1,005,613	$ 28,780	$ 1,034,393
2020	49,912	3,677	53,589
2021	19,304	1,287	20,591
2022	19,940	654	20,594
TOTAL	$ 1,094,769	$ 34,398	$ 1,129,167

Long-term Liability Activity

Long-term liability activity for the year ended April 30, 2018 was as follows:

	April 30, 2017	Increases	Decreases	April 30, 2018	Due Within One Year
Governmental Activities:					
Compensated absences	$ 311,846	$ 314,733	$ 274,534	$ 352,045	$ 352,045
Notes payable	198,930	944,371	48,532	1,094,769	1,005,613
Net pension liability	335,909	-	112,459	223,450	-
Total Governmental Activities	$ 846,685	$ 1,259,104	$ 435,525	$ 1,670,264	$1,357,658

NOTE E - GENERAL OBLIGATION BONDS AND NOTES PAYABLE - CONTINUED

Long-term Liability Activity (continued)

	April 30, 2017	Increases	Decreases	April 30, 2018	Due Within One Year
Business-type Activities:					
General obligation bonds	$ 12,738,184	$ 1,325,218	$ 1,074,295	$ 12,989,107	$1,353,250
Unamortized bond premium	45,317	-	9,888	35,429	-
Total bonds payable	12,783,501	1,325,218	1,084,183	13,024,536	1,353,250
Compensated absences	77,826	34,201	19,468	92,559	92,559
Net pension liability	108,825	-	5,740	103,085	-
Total Business-type Activities	$ 12,970,152	$ 1,359,419	$ 1,109,391	$ 13,220,180	$1,445,809

Compensated absences do not have a fixed repayment date, but are due to employees if they terminate employment and are reflected as a currently due liability on the statement of net position.

NOTE F - PENSION PLANS

Plan Description

The Town currently participates in two State of Delaware administered multi-employer county and municipal pension plans, which are cost-sharing plans: (1) the County & Municipal Other Employees' Pension plan, (Other Employees' Plan) and (2) the County & Municipal Police and Firefighters' Pension Plan (Police's Plan). The State of Delaware General Assembly is responsible for setting benefits and contributions and amending plan provisions. The Board of Pension Trustees issues a publicly available report that includes financial statements and required supplementary information for the plans. That report can be accessed at http://auditor.delaware.gov/reports.shtml.

All full-time employees under the Other Employees' Plan and the Police's Plan are eligible to participate in the defined benefit plans. Benefits vest after five years of service for both plans. Non-police employees may retire if they have five years of credited service and are 62 years old, or they have fifteen years of credited service and are 60 years old, or they have thirty years of credited service under the Other Employees' Plan. Police employees under the Police's Plan may retire when they have ten years of credited service and are 62 years old, or their age plus credited service (but not less than ten years) equals 75, or they have twenty years of credited service. Pension benefits are based on average compensation over the credited service period. The Other Employees' Plan is based on the highest five years of compensation and the Police's Plan is based on the highest three consecutive years of compensation.

NOTE F - PENSION PLANS - CONTINUED

Plan Description - Continued

Disability benefits and survivor benefits are included in both pension plans. The details of both benefits are described below

Disability Benefits	Other Employees' Plan	Police's Plan
Duty - Total Disability	Not applicable	75% of final average compensation plus 10% for each dependent not to exceed 25% for all dependents
Duty - Party Disability	Not applicable	Same as Service Benefits calculation, subject to minimum 50% of final average compensation
Non-Duty	Same as Service Benefits calculation. Must have 5 years of credited service	Total disability is the same as Service Benefits calculation, subject to a minimum 50% of final average monthly compensation plus 5% of each dependent not to exceed 20% for all dependents. Partial disability is a minimum of 30% of final average monthly compensation.

Survivor benefits	Other Employees' Plan	Police's Plan
Employee receiving a pension	75% of the pension	50% of the pension
Employee is active	50% of the pension the employee would have received at age 62	50% of the pension the employee would have received at age 62
Employee becomes deceased in the line of duty	Not applicable	75% of the employee's compensation

NOTE F - PENSION PLANS - CONTINUED

Contributions

Non-police employees of the Town are required to contribute 3% of their gross earnings over $ 6,000 to the pension plan. Police employees are required to contribute 7% of their base pay to the police pension plan. The Town makes monthly contributions as required by State statutes. During the year ended April 30, 2018, the Town was required to contribute 7.09% and 11.42% of its gross payroll to the Other Employees' Plan and Police's Plan, respectively. Those amounts contributed to the pension plan from the Town were $ 84,513 for the Other Employees' Plan and $ 142,741 for the Police's Plan for the year ended April 30, 2018, which includes pension payables totaling $ 1,629 and $ 2,672, respectively, for both plans.

The State periodically grants funds to municipalities to provide for police pensions. The Town uses these monies to fund the pension plan for police employees.

Pension Liabilities

For the Other Employees' Plan at April 30, 2018, the Town reported a liability of $ 192,916 for its proportionate share of the net pension liability that is allocated amongst the Town's funds. For the Police's Plan, the Town reported a liability of $ 133,619 for its proportionate share of the net pension liability. The net pension liabilities for both of these plans were measured as of June 30, 2017. The collective total pension liability for the June 30, 2017 measurement date was determined by an actuarial valuation as of June 30, 2016, and update procedures were used to roll forward the total pension liability to June 30, 2017. The Town's proportion for both of the plans were based on an election made by the Plans' Board of Pension Trustees to allocate the employer's proportionate share of the collective pension amounts based on the percentage of actual employer contributions. At June 30, 2017, the Town's proportion was 2.98% and 1.33% for the Other Employees' Plan and the Police's Plan, respectively, which was a decrease of .41% and .15%, respectively, from its proportion valuation as of June 30, 2016.

Pension Expense

For the year ended April 30, 2018, the Town recognized pension expense of $ 86,548 and $ 153,915 for the Other Employees' Plan and the Police's Plan, respectively.

NOTE F - PENSION PLANS - CONTINUED

Deferred Inflows/Outflows of Resources Related to Pensions

At April 30, 2018, the Town reported deferred outflows of resources related to pensions from the following sources:

	Deferred Outflows of Resources		
	Other Employees' Plan	Police's Plan	Total
Governmental Activities			
Net differences between expected and actual experience	$ 26,400	$ 31,975	$ 58,375
Changes of assumptions	31,043	112,810	143,853
Net difference between projected and actual investment earnings on pension plan investments	11,056	68,105	79,161
Changes in proportion and differences between Town contributions and proportionate share of contributions	-	11,083	11,083
Town contributions subsequent to the measurement date	29,905	114,838	144,743
Total Governmental Activities Deferred Outflows of Resources	$ 98,404	$ 338,811	$ 437,215
Business-type Activities			
Net differences between expected and actual experience	$ 26,002	$ -	$ 26,002
Changes of assumptions	30,572	-	30,572
Net difference between projected and actual investment earnings on pension plan investments	10,889	-	10,889
Town contributions subsequent to the measurement date	41,387	-	41,387
Total Business-type Activities Deferred Outflows of Resources	$ 108,850	$ -	$ 108,850

The $ 71,292 ($ 29,905 for governmental activities and $ 41,387 for business-type activities) and the $ 114,838 total reported as part of the deferred outflows of resources for both the Other Employees' Plan and the Police's Pan, respectively, are related to pensions resulting from the Town's contributions subsequent to the measurement date. These contributions will be recognized as a reduction of the net pension liability in the year ended April 30, 2019.

NOTE F - PENSION PLANS - CONTINUED

Deferred Inflows/Outflows of Resources Related to Pensions (continued)

At April 30, 2018, the Town reported deferred inflows of resources related to pensions from the following sources:

	Deferred Inflows of Resources		
	Other Employees' Plan	Police's Plan	Total
Governmental Activities			
Net differences between expected and actual experience	$ 6,959	$ 81,486	$ 88,445
Changes of assumptions	-	49,235	49,235
Changes in proportion and differences between Town contributions and proportionate share of contributions	11,517	7,428	18,945
Total Governmental Activities Deferred Inflows of Resources	$ 18,476	$ 138,149	$ 156,625
Business-type Activities			
Net differences between expected and actual experience	$ 6,044	$ -	$ 6,044
Changes in proportion and differences between Town contributions and proportionate share of contributions	10,002	-	10,002
Total Business-type Activities Deferred Inflows of Resources	$ 16,046	$ -	$ 16,046

The change in the employer proportionate share for both the deferred outflows of resources and the deferred inflows of resources are the amounts of the difference between the employer proportionate share of net pension liability in the prior year compared to the current year. This change in proportion is amortized over the average of the expected remaining service lives of all plan members, which are 9 years and 10 years for the Other Employees' Plan and the Police's Plan, respectively.

Other amounts reported as deferred outflows of resources and deferred inflows of resources (excluding employer specific amounts) will be recognized in pension expense as follows:

Years Ending April 30	Other Employee's Plan	Police's Plan	Total
2019	$ 12,011	$ 4,818	$ 16,829
2020	25,815	62,509	88,324
2021	19,576	37,076	56,652
2022	3,119	(29,600)	(26,481)
2023	10,611	928	11,539
Thereafter	30,308	10,093	40,401

NOTE F - PENSION PLANS - CONTINUED

Actuarial Assumptions

The actuarial assumptions for the June 30, 2017 measurement date that is being applied to the April 30, 2018 period for both Plans were determined by an actuarial valuation as of June 30, 2016, and as mentioned, update procedures were used to roll forward the total pension liability to June 30, 2017.

These actuarial valuations used the following actuarial assumptions for both plans as detailed below:

	Other Employee's Plan	Police's Plan
Actuarial assumptions:		
Investment rate of return/Discount rate*	7.0%	7.0%
Projected salary increases*	2.5% + Merit	2.5% + Merit
Cost-of-living adjustments (COLAs)	0.0%	0.0%

**Inflation is included at 2.5% for both Plans.*

For both Plans, the total pension liabilities are measured based on assumptions pertaining to the interest rates, inflation rates, and employee demographic behavior in future years as a collective. The assumptions were used based on the results of an actuarial experience study conducted in 2016, details of which are provided in the presentation of that study to the Board of Trustees. It is likely that future experience will not exactly conform to these assumptions. The emerging liabilities may be higher or lower than anticipated to the extent that actual experience deviates from these assumptions. The more the experience deviates, the larger the impact will be on the future financial statements.

Mortality assumptions for the June 30, 2017 reporting period are based on the RP-2014 tables with gender adjustments for healthy annuitants and disabled retirees and an adjusted version on MP-2015 mortality improvement scale on a fully generational basis.

Projected benefit payments do not include the effects of projected ad hoc cost-of-living adjustments (ad hoc COLAs) as they are not substantially automatic. The primary considerations relevant to making this determination include the historic pattern of granting the changes and the consistency in the amounts of the changes for both Plans.

NOTE F - PENSION PLANS - CONTINUED

Actuarial Assumptions (continued)

The long-term expected rate of return on pension plan investments was determined using a building-block method in which best-estimate ranges of expected future real rates of return (expected returns, net of investment expense and inflation) are developed for each major asset class. These ranges are combined to produce the longer-term expected rate of return by weighing the expected future real rates of return by an asset allocation percentage, which is based on the nature and mix of current and expected plan investments, and by adding expected inflation. Best estimates of geometric real rates of return for each major asset class included in the current and expected asset allocation are summarized in the following table for both Plans:

Asset Class	Long-term Expected Real Rate of Return	Asset Allocation
Domestic equity	5.7%	33.5%
International equity	5.7	13.7
Fixed income	2.0	26.6
Alternative investments	7.8	22.7
Cash and cash equivalents	-	3.5

Discount Rate

The discount rate used to measure the total pension liability for both Plans was 7.0%. The change in the discount rate assumption to 7.0% from 7.2% was due to an adoption by the Board of Trustees in Fiscal Year 2017. The projection of cash flows used to determine the discount rate assumed that contributions from plan members for both Plans will be made at the current contribution rates and that contributions from employers will be made at rates actuarially determined by the Board of Pension Trustees. Based on those assumptions, both Plans' fiduciary net position were projected to be available to make all projected future benefit payments of the Plans' current members. Therefore, the long-term expected rate of return on pension investments for both Plans were applied to all periods of projected benefit payments to determine the total pension liability.

NOTE F - PENSION PLANS - CONTINUED

Sensitivity of the Town's Proportionate Share of the Net Pension Liability (Asset) to Changes in the Discount Rate

The following presents the Town's proportionate share of the net pension liability (asset) calculated using the discount rate of 7.0% for both Plans, as well as what the Plans' net pension liability (asset) would be if it were calculated using a discount rate that is 1-percentage-point lower (6.0%) or 1-percentage-point higher (8.0%) than the current rate:

	1% Decrease (6.0%)	Current Discount Rate (7.0%)	1% Increase (8.0%)
Other Employees' Plan	$ 434,096	$ 192,916	$ (5,419)
Police's Plan	844,971	133,619	(445,575)

Pension Plan Fiduciary Net Position

The detailed information about the Plan's fiduciary net position for both the Other Employees' Plan and the Police's Plan are available as mentioned under the Plan Description of this Note from the Board of Pension Trustees governed by the State of Delaware General Assembly.

NOTE G - OTHER LIABILITIES

In 1999, the Town loaned the Historic Georgetown Association, Inc. $ 90,000 that is secured by a mortgage on the railroad depot property. The loan will be forgiven at a rate of $ 4,500 per year for 20 years as long as the property is not conveyed to another owner. A loan receivable and other liability for $ 90,000 was established to record the loan and the related deferred loan forgiveness. At April 30, 2018, the loan receivable and corresponding liability of $ 9,000 were on the fund financial statements.

NOTE H - OPERATING LEASES

The Town leases various equipment under operating leases in the general fund. Minimum rental payments are due on various contracts through 2023. The Town rents land for the sewer plant's spray irrigation system. The land leases contain renewal options. Operating lease expenses incurred in the General and Proprietary Funds were $ 39,718 and $ 97,681, respectively. Future minimum rental payments are as follows:

Years Ending April 30	General Fund	Proprietary Fund	Total
2019	$ 50,931	$ 93,763	$ 144,694
2020	43,943	59,581	103,524
2021	32,324	11,961	44,285
2022	8,671	1,060	9,731
2023	6,822	-	6,822
TOTAL	$ 142,691 $	$ 166,365	$ 309,056

NOTE I - RISK MANAGEMENT

The Town is exposed to various risks of loss related to torts; theft of, damage to and destruction of assets; errors and omissions for which the government carries commercial insurance. There have been no significant reductions in coverage from the prior year end. Settlements have not exceeded coverage in the last three years.

The Town has been participating in the Delaware League of Local Governments, DeLea Founders Insurance Trust (DFIT) for municipal workers' compensation coverage. Starting in September 2014, DFIT began operations as a self-insurance worker's compensation program for municipalities within the State of Delaware. This is a risk-sharing pool arrangement by which the participating municipalities pool risks and funds and share in the cost of losses. The Town pays an annual premium to DFIT for its worker's compensation coverage that will be self-sustaining through those member premiums. DFIT purchases an aggregate excess workers' compensation insurance policy, which limits individual losses as a group to $ 750,000 per occurrence and an additional $ 2,000,000 dollar for dollar reimbursement to the group once the losses exceed the aggregate retention amount for the period of coverage. The pooling agreement allows the pool to make additional assessments to make the pool self-sustaining. It is not possible to estimate the amount of such additional assessments.

NOTE J - UTILITY PROJECTS

The Town has received funding through the State of Delaware Office of Drinking Water for various continuing water projects. Total expenditures related to the open project is expected to total $ 3,800,000. The Town has drawn $ 3,547,789 from the loan as of April 30, 2018, which will all be forgiven upon project completion.

NOTE K - PENDING GOVERNMENTAL ACCOUNTING STANDARDS BOARD STATEMENTS

GASB has issued the following statements, which may impact the Town's financial reporting requirements in the future.

- GASBS No. 83, *Certain Asset Retirement Obligations,* effective for the fiscal year beginning May 1, 2019
- GASBS No. 84, *Fiduciary Activities,* effective for the fiscal year beginning May 1, 2019.
- GASBS No. 85, *Omnibus 2017,* effective for the fiscal year beginning May 1, 2018.
- GASBS No. 86, *Certain Debt Extinguishment Issues,* effective for the fiscal year beginning May 1, 2018.
- GASBS No. 87, *Leases,* effective for the fiscal year beginning after May 1, 2020.
- GASBS No. 88, *Certain Disclosures Related to Debt, Including Direct Borrowings and Direct Placements,* effective for the fiscal year beginning May 1, 2019.

NOTE L - EMPLOYEE HEALTH PLAN

The Town is exposed to the risk of loss related to employee medical expenses. During fiscal year 2018, the Town maintained a self-insured plan for employee medical expenses in which expenses per employee were covered annually ($ 45,000 and $ 40,000 for the calendar years 2018 and 2017, respectively). The Town has an estimated maximum aggregate exposure of $ 391,735 and $ 364,614 for the calendar years 2018 and 2017, respectively. The employee health plan is administered by an outside agency.

NOTE L - EMPLOYEE HEALTH PLAN - CONTINUED

Contributions from the Town and employee withholdings are deposited into a reserve fund to pay prior and current-year claims and premiums. Estimated risks and losses are based upon historical costs, financial analyses and estimated effects of plan changes. The claims liability reported in the general fund at April 30, 2018 is based on the requirements of GASBS No. 10, which requires that a liability for claims be reported if information prior to the issuance of the financial statements indicates that it is probable that a liability has been incurred at the date of the financial statements and the amount of the loss can be reasonably estimated. The liability is included in the accrued liabilities total on the balance sheet. Changes in the Fund's claims liability during the past two fiscal years were as follows:

Year	Balance at Beginning of Year	Current-Year Premiums, Claims and Changes in Estimates	Premiums and Claims Payments	Balance at End of Year
2018	$ 45,483	$ 588,191	$ (602,375)	$ 31,299
2017	35,228	634,645	(624,390	45,483

NOTE M - TAX ABATEMENTS

The Town has established a Downtown Development District Incentives Program (the program) with an effective date of November 16, 2016 to November 15, 2026 to promote the renovation, utilization, development, and re-development of parcels within the designated section (the Downtown Development District) of the Town in accordance with Ordinance 2016-11.

Applications for projects that meet the criteria for the Downtown Development District Incentives Program must be submitted and approved by the Town. The program is available to any project application that: 1) was filed within the effective date of the Ordinance, 2) has not obtained a certificate of occupancy and/or completion and finalization of the building permit prior to the effective date of the Ordinance, 3) the construction or renovation of the project has not commenced prior to the issuance of a building permit by the Town and 4) the beneficiary of the project is not delinquent on any obligations due to the Town. Once the eligibility criteria has been satisfied, the Town may revoke at any time the tax abatement and/or fee incentives from the beneficiary of the project upon delinquency on any Town obligations that become due.

NOTE M - TAX ABATEMENTS - CONTINUED

The program lists the following tax abatements and fee incentives for eligible projects to construct, remodel, or re-construct any buildings or structures, or any portion of any of such buildings or structures that are within the boundaries of the designated section of the Town upon review of project application:

Property tax increase phase in - All eligible projects that will have a property tax assessment increase in connection with the construction or remodeling of any building within the Downtown Development District will have a phase in for that incremental property tax increase. The phase in will be ten percent (10%) in year one and will increase by an additional ten percent (10%) each year until year ten for that tax increase. There was no abatement during the fiscal year.

Business license fee - The annual Town's business license fee will be waived for the first five (5) years in operation. This is offered only to new businesses that have formed and will be operating within the Downtown Development District within the effective date of the program. The total fees waived were less than $ 1,000 during the fiscal year.

Building permit fee reduction - All eligible projects will be given a reduction in the building permit fee based on the value of the improvement. The reduction amount ranges from a minimum of fifteen percent (15%) to a maximum of seventy five percent (75%). The building permit fee reduction was less than $ 1,000 during the fiscal year.

The reduction in fees are illustrated below:

Value of Improvement Greater Than	But No More Than	Fee Waiver
$ 300	$ 1,000,000	15%
1,000,000	2,000,000	30%
2,000,000	3,000,000	45%
3,000,000	4,000,000	60%
5,000,000		75%

NOTE M - TAX ABATEMENTS - CONTINUED

Emergency Services and Georgetown Recreation, Education, and Arts Trust Fund fee reduction (GREAT Fund) - All eligible projects will be assessed a 50% reduction in fees for the emergency services and GREAT fund fee for new construction. The fee is calculated using the value of the new construction and a sliding scale as described in the Town's Code. The GREAT fund fee reduction was less than $ 1,000 during the fiscal year.

The reduction in fees is illustrated below:

Value of Improvement	Emergency Services Fee	GREAT Fund Fee	Fee Waiver
Less than $99,999	0.10%	0.10%	50%
$ 100,000 to $ 499,999	0.30%	0.30%	50%
Over $ 500,000	0.50%	0.50%	50%

Impact Fee (Water and Sewer) Reduction - All eligible projects of a commercial nature will be assessed at a twenty percent (20%) reduction from the Town's adopted water and sewer impact fees at the time of building permit issuance. Projects that have a mixed-use nature (commercial / residential) will be assessed a thirty-five percent (35%) reduction from the adopted water and sewer impact fees at the time of building permit issuance. The fee calculation will be based on one equivalent dwelling unit (EDU) per unit, with additional EDU's being calculated at the end of the first twelve months in operation. The sewer and water impact fees are described in the Town's Code. There were no impact fee reductions during the fiscal year.

Sign, Façade, and Awning Grant - All eligible projects can apply to participate in the Town of Georgetown Sign, Façade, and Awning Grant program. This program is designed to provide funding towards the purchase and/or construction of signs, façade, and awnings for any building that meets the eligibility requirements within the Downtown Development District. The Town will provide $ 3,000 annually in order to fund a maximum of six matching grants of $ 500 each year. There were no grants awarded during the fiscal year.

NOTE N - CONTRACTS

The Town is obligated to pay benefits to certain employees who have entered into employment contracts with the Town in the case of involuntary termination without cause. As of April 30, 2018, no amount was owed under these contracts.

The Town has a three-year agreement with the Georgetown Fraternal Order of Police Bargaining Unit that ends April 30, 2019. The agreement provides certain rights and benefits to the Town's police officers that are recognized in the financial statements.

NOTE O - COMMITMENTS AND CONTINGENCIES

During the fiscal year April 30, 2017, the United States Department of Agriculture (USDA) committed loan funds to the Town to finance its Town Hall renovation project (37 the Circle and 39 the Circle) totaling $ 1,925,000. The term of the loan from USDA will be 30 years from the date of loan closing to reimburse interim financing from PNC for project costs. The Town has incurred $ 1,166,262 in total project costs to date. The project is still ongoing as of April 30, 2018.

REQUIRED SUPPLEMENTARY INFORMATION

TOWN OF GEORGETOWN
SCHEDULE OF THE TOWN'S PROPORTIONATE SHARE OF THE NET PENSION LIABILITY - COUNTY & MUNICIPAL OTHER EMPLOYEES' PENSION PLAN - A COST SHARING DEFINED BENEFIT PLAN (LAST 10 YEARS*)
FOR THE YEAR ENDED APRIL 30, 2018

	2018	2017	2016
Town's proportion of the net pension liability	2.98%	3.39%	3.57%
Town's proportionate share of the net pension liability	$ 192,916	$ 210,123	$ 1,522
Town's covered payroll	$ 1,105,145	$ 1,101,304	$ 1,074,479
Town's proportionate share of the net pension liability as a percentage of its covered payroll	17.46%	19.08%	0.14%
Plan fiduciary net position as a percentage of the total pension liability	87.62%	86.38%	99.89%

Notes to Schedule:

1. The amounts presented are as of and for the prior pension plan year ended June 30.

*Fiscal year April 30, 2016 was the first year of implementation, therefore only three years are shown.

TOWN OF GEORGETOWN
SCHEDULE OF THE TOWN'S PROPORTIONATE SHARE OF THE NET PENSION LIABILITY - COUNTY & MUNICIPAL POLICE AND FIREFIGHTERS' PENSION PLAN - A COST SHARING DEFINED BENEFIT PLAN (LAST 10 YEARS*)
FOR THE YEAR ENDED APRIL 30, 2018

	2018	2017	2016
Town's proportion of the net pension liability	1.33%	1.48%	1.17%
Town's proportionate share of the net pension liability	$ 133,619	$ 234,611	$ (61,460)
Town's covered payroll	$ 1,072,927	$ 1,024,631	$ 838,243
Town's proportionate share of the net pension liability as a percentage of its covered payroll	12.45%	22.90%	7.33%
Plan fiduciary net position as a percentage of the total pension liability	97.00%	94.70%	101.97%

Notes to Schedule:

1. The amounts presented are as of and for the prior pension plan year ended June 30.

*Fiscal year April 30, 2016 was the first year of implementation, therefore only three years are shown.

TOWN OF GEORGETOWN
SCHEDULE OF CONTRIBUTIONS - COUNTY & MUNICIPAL OTHER EMPLOYEES' PENSION PLAN - A COST SHARING DEFINED BENEFIT PENSION PLAN (LAST 10 YEARS*)
FOR THE YEAR ENDED APRIL 30, 2018

	2018	2017	2016
Statutorily required contribution (actuarially determined)	$ 84,513	$ 73,644	$ 68,823
Contributions in relation to the actuarially required contributions	(84,513)	(73,644)	(68,823)
Contributions deficiency (excess)	$ -	$ -	$ -
Town's covered payroll	$ 1,178,122	$ 1,105,145	$ 1,101,304
Contributions as a percentage of covered payroll	7.17%	6.66%	6.25%

Notes to Schedule:

1. Methods and assumptions used to determine contribution rates are detailed in Note F.

*Fiscal year April 30, 2016 was the first year of implementation, therefore only three years are shown.

TOWN OF GEORGETOWN
SCHEDULE OF CONTRIBUTIONS - COUNTY & MUNICIPAL POLICE AND FIREFIGHTERS' PENSION PLAN - A COST SHARING DEFINED BENEFIT PENSION PLAN (LAST 10 YEARS*)
FOR THE YEAR ENDED APRIL 30, 2018

	2018	2017	2016
Statutorily required contribution (actuarially determined)	$ 142,741	$ 147,891	$ 142,361
Contributions in relation to the actuarially required contributions	(142,741)	(147,891)	(142,361)
Contributions deficiency (excess)	$ -	$ -	$ -
Town's covered payroll	$ 1,184,825	$ 1,072,927	$ 1,024,631
Contributions as a percentage of covered payroll	12.05%	13.78%	13.89%

Notes to Schedule:

1. Methods and assumptions used to determine contribution rates are detailed in Note F.

*Fiscal year April 30, 2016 was the first year of implementation, therefore only three years are shown.

SUPPLEMENTARY INFORMATION

TOWN OF GEORGETOWN
SCHEDULE OF GENERAL FUND REVENUES AND OTHER FINANCING SOURCES - BUDGET AND ACTUAL
FOR THE YEAR ENDED APRIL 30, 2018

	Original and Final Budget	Actual	Variance with Budget Positive (Negative)
TAXES AND FEES			
Courthouse municipality fees	$ 250,000	$ 546,580	$ 296,580
Property and capitation taxes	1,556,853	1,561,554	4,701
Realty transfer tax	125,000	246,343	121,343
Penalties	17,000	32,906	15,906
TOTAL TAXES AND FEES	1,948,853	2,387,383	438,530
INTERGOVERNMENTAL			
General administration grants	-	19,009	19,009
Street grants	100,000	198,926	98,926
Police grants	52,757	267,096	214,339
Police pension	70,000	92,734	22,734
TOTAL INTERGOVERNMENTAL	222,757	577,765	355,008
CHARGES FOR SERVICES			
Trash pickup	475,000	494,703	19,703
Business and rental licenses	190,000	218,921	28,921
Permits and variances	50,000	240,134	190,134
Planning and zoning fees	10,000	31,947	21,947
TOTAL CHARGES FOR SERVICES	725,000	985,705	260,705
FINES AND PARKING			
Parking meters and fines	42,000	35,097	(6,903)
Court fines	80,000	106,501	26,501
TOTAL FINES AND PARKING	122,000	141,598	19,598
MISCELLANEOUS			
State and local in lieu of taxes	70,000	54,062	(15,938)
Franchise fees	53,000	57,019	4,019
Investment income	-	780	780
Miscellaneous	104,204	213,660	109,456
TOTAL MISCELLANEOUS	227,204	325,521	98,317
TOTAL REVENUES	3,245,814	4,417,972	1,172,158
OTHER FINANCING SOURCES			
Loan proceeds	-	944,371	944,371
Transfers in, net	478,757	373,247	(105,510)
TOTAL REVENUES AND OTHER FINANCING SOURCES	$ 3,724,571	$ 5,735,590	$ 2,011,019

TOWN OF GEORGETOWN
SCHEDULE OF GENERAL FUND EXPENDITURES - BUDGET AND ACTUAL
FOR THE YEAR ENDED APRIL 30, 2018

	Original and Final Budget	Actual	Variance with Budget Positive (Negative)
GENERAL ADMINISTRATION			
Dues and donations	$ 10,000	$ 70,455	$ (60,455)
Employee benefits	18,045	27,580	(9,535)
Gasoline and oil	1,400	1,097	303
Insurance	9,164	7,159	2,005
Lease expense	-	15,650	(15,650)
Office	13,000	11,828	1,172
Payroll taxes	8,417	7,198	1,219
Pension expense	7,569	12,515	(4,946)
Professional services	95,000	104,660	(9,660)
Repairs and maintenance	-	1,899	(1,899)
Salaries	110,031	103,678	6,353
Special projects	-	6,937	(6,937)
Utilities	16,000	21,951	(5,951)
TOTAL GENERAL ADMINISTRATION	288,626	392,607	(103,981)
PLANNING AND ZONING			
Employee benefits	15,763	19,174	(3,411)
Insurance	2,088	1,709	379
Office	10,710	5,580	5,130
Payroll taxes	3,892	3,784	108
Pension expense	3,571	3,643	(72)
Professional services	49,000	65,072	(16,072)
Salaries	50,873	51,592	(719)
Utilities	655	810	(155)
TOTAL PLANNING AND ZONING	136,552	151,364	(14,812)
PUBLIC SAFETY			
Employee benefits	396,245	340,881	55,364
Gasoline and oil	38,000	40,862	(2,862)
Insurance	60,882	58,365	2,517
Maintenance, supplies and materials	46,000	39,609	6,391
Office	28,000	49,304	(21,304)
Payroll taxes	112,455	116,049	(3,594)
Pension expense	138,327	151,756	(13,429)
Professional services	49,000	76,724	(27,724)
Salaries	1,470,001	1,511,210	(41,209)
Utilities	20,000	21,113	(1,113)
TOTAL PUBLIC SAFETY	2,358,910	2,405,873	(46,963)

TOWN OF GEORGETOWN
SCHEDULE OF GENERAL FUND EXPENDITURES - BUDGET AND ACTUAL - CONTINUED
FOR THE YEAR ENDED APRIL 30, 2018

	Original and Final Budget	Actual	Variance with Budget Positive (Negative)
STREETS AND GROUNDS			
Employee benefits	$ 91,012	$ 100,229	$ (9,217)
Gasoline and oil	6,000	13,496	(7,496)
Insurance	17,543	15,370	2,173
Lease expense	-	24,068	(24,068)
Office	10,000	6,432	3,568
Payroll taxes	17,733	16,713	1,020
Pension expense	15,652	15,676	(24)
Professional services	26,000	51,161	(25,161)
Repairs and maintenance	58,000	129,112	(71,112)
Salaries	231,810	224,885	6,925
Special events	1,000	368	632
Street lights	120,000	153,161	(33,161)
Trash removal and fees	470,000	410,759	59,241
Utilities	4,000	3,565	435
TOTAL STREETS AND GROUNDS	1,068,750	1,164,995	(96,245)
DEBT SERVICE	9,245	62,681	(53,436)
CAPITAL OUTLAY			
General administration	6,332	1,051,673	(1,045,341)
Public safety	45,694	191,980	(146,286)
Streets and grounds	24,068	8,000	16,068
TOTAL CAPITAL OUTLAY	76,094	1,251,653	(1,175,559)
TOTAL EXPENDITURES	$ 3,938,177	$ 5,429,173	$ (1,490,996)

TOWN OF GEORGETOWN
PROPERTY ASSESSMENTS
FOR THE MOST RECENT TEN YEARS

Assessment Date	Assessed Property Values	
	Taxable	Non-taxable
May 1, 2008	$ 44,268,064	$ 13,963,550
May 1, 2009	45,138,211	14,113,650
May 1, 2010	44,943,037	14,604,700
May 1, 2011	45,386,077	14,733,100
May 1, 2012	45,214,117	15,115,650
May 1, 2013	46,036,221	15,182,400
May 1, 2014	46,575,180	15,107,468
May 1, 2015	47,496,370	15,739,405
May 1, 2016	48,119,764	15,502,881
May 1, 2017	48,860,666	15,378,705

SINGLE AUDIT SUPPLEMENT

TOWN OF GEORGETOWN
SCHEDULE OF EXPENDITURES OF FEDERAL AWARDS
FOR THE YEAR ENDED APRIL 30, 2018

Federal Grantor/Pass-through Grantor/Program Title	Federal CFDA Number	Pass-Through Entity Identifying Number	Federal Expenditures
U.S. DEPARTMENT OF AGRICULTURE			
Direct Programs:			
Community Facilities Loans and Grants*	10.766		$ 1,024,396
DEPARTMENT OF JUSTICE			
Passed through State - Delaware Criminal Justice Council Council:			
Crime Victim Assistance	16.575	2015-VF-1274	80,690
Violence Against Women Formula Grants	16.588	VW13-217 VW14-1640 VW15-1655	85,224
Edward Byrne Memorial Justice Assistance Grant Program	16.738	2014-DB-P/T-1641 2016-DB-P/T-1793	17,040
TOTAL DEPARTMENT OF JUSTICE			182,954
DEPARTMENT OF TRANSPORTATION			
Passed through State - Delaware Department of Homeland Security:			
Highway Safety Cluster			
State and Community Highway Safety	20.600	N / A	9,260
Alcohol Open Container Requirements	20.607	N / A	10,295
National Priority Safety Programs	20.616	N / A	4,160
TOTAL HIGHWAY SAFETY CLUSTER			23,715
ENVIRONMENTAL PROTECTION AGENCY			
Passed through State - Delaware Department of Natural Resources and Environmental Control:			
Capitalization Grants for Drinking Water State Revolving Funds	66.468	D-2070	105,508
TOTAL EXPENDITURES OF FEDERAL AWARDS			$ 1,336,573

* Denotes major program.

See accompanying notes to Schedule of Expenditures of Federal Awards.

NOTE A - BASIS OF PRESENTATION

The accompanying Schedule of Expenditures of Federal Awards (the Schedule) includes the federal award activity of the Town of Georgetown under programs of the federal government for the year ended April 30, 2018. The information in this Schedule is presented in accordance with the requirements of Title 2 U.S. *Code of Federal Regulations (CFR)* Part 200, *Uniform Administrative Requirements, Cost Principles, and Audit Requirements for Federal Awards* (Uniform Guidance). Because the Schedule presents only a selected portion of the operations of the Town of Georgetown, it is not intended to and does not present the financial position, changes in net assets, or cash flows of the Town of Georgetown.

NOTE B - SUMMARY OF SIGNIFICANT ACCOUNTING POLICIES

Basis of Accounting

Expenditures reported on the Schedule are presented using the accrual and the modified accrual basis of accounting, which are described in Note A of the notes to basic financial statements. Such expenditures are recognized following, as applicable, either the cost principles in OMB Circular A-87, *Cost Principles for State, Local, and Indian Tribal Governments,* or the cost principles contained in Title 2 U.S. *Code of Federal Regulations* Part 200, *Uniform Administrative Requirements, Cost Principles, and Audit Requirements for Federal Awards*, wherein certain types of expenditures are not allowable or are limited as to reimbursement.

De Minimis Indirect Cost Rate

The Town of Georgetown has not elected to use the 10 percent de minimis indirect cost rate as allowed under the Uniform Guidance. The costs reported on the Schedule of Expenditure of Federal Awards represent direct costs incurred by the Town for each federal expenditure.

NOTE C - LOAN AND INDIRECT AWARDS

The Town's federal expenditures for CFDA No. 10.766 are being funded directly from the U.S. Department of Agriculture for rural development totaling $ 1,925,000. The Town is currently using interim financing to fund the project and will be reimbursed in subsequent years from USDA loan commitments upon project completion. The Town has incurred eligible program costs from current and previous fiscal periods totaling $ 1,147,444, of which $ 1,024,396 are total current year expenditure. The gross advances received on this award for the current year was $ 847,755. The Town's loan balance from interim financing as of April 30, 2018 is $ 957,977.

The Town's federal expenditures for CFDA No. 66.468 are being funded by federal funds passed through the Delaware Department of Natural Resources and Environmental Control and combined with state loan funds. Total funds of $ 3,800,000 (D-2070) are available to be passed through with 77.53% of current advances originally from federal funds. The Town has incurred eligible program costs from current and previous fiscal periods totaling $ 3,200,082. The gross advances received on these awards for the current year was $ 1,325,218. The Town's loan balance as of April 30, 2018 is $ 3,547,789.

The Town's federal expenditures funded by federal and state awards/grants have no continuing compliance requirements.

A PROFESSIONAL CORPORATION • CERTIFIED PUBLIC ACCOUNTANTS

DAVID C. DOANE, CPA
CHARLES H. STERNER, JR. CPA, CVA
SHELDON L. FORNEY, CPA
JAY M. STEVENS, CPA, PFS
ROGER R. REED, CPA
ELAINE E. GRAVES, CPA
BRYAN L. HUDSON, CPA
FREDERICK A. MAST, CPA

TRUITT W. JEFFERSON
(1937 - 2016)

DAVID R. URIAN, DIRECTOR
RETIRED

INDEPENDENT AUDITOR'S REPORT ON COMPLIANCE FOR EACH MAJOR PROGRAM AND ON INTERNAL CONTROL OVER COMPLIANCE REQUIRED BY THE UNIFORM GUIDANCE

To the Honorable Mayor and Council
Town of Georgetown
Georgetown, Delaware

Report on Compliance for Each Major Federal Program

We have audited the Town of Georgetown's compliance with the types of compliance requirements described in the *OMB Compliance Supplement* that could have a direct and material effect on each of the Town of Georgetown's major federal programs for the year ended April 30, 2018. The Town of Georgetown's major federal programs are identified in the summary of independent auditor's results section of the accompanying schedule of findings and questioned costs.

Management's Responsibility

Management is responsible for compliance with federal statutes, regulations, and the terms and conditions of its federal awards applicable to its federal programs.

Auditor's Responsibility

Our responsibility is to express an opinion on compliance for each of the Town of Georgetown's major federal programs based on our audit of the types of compliance requirements referred to above. We conducted our audit of compliance in accordance with auditing standards generally accepted in the United States of America; the standards applicable to financial audits contained in *Government Auditing Standards*, issued by the Comptroller General of the United States; and the audit requirements of Title 2 U.S. *Code of Federal Regulations* (CFR) Part 200, *Uniform Administrative Requirements, Cost Principles, and Audit Requirements for Federal Awards* (Uniform Guidance). Those standards and the Uniform Guidance require that we plan and perform the audit to obtain reasonable assurance about whether noncompliance with the types of compliance requirements referred to above that could have a direct and material effect on a major federal program occurred. An audit includes examining, on a test basis, evidence about the Town of Georgetown's compliance with those requirements and performing such other procedures as we considered necessary in the circumstances.

We believe that our audit provides a reasonable basis for our opinion on compliance for each major federal program. However, our audit does not provide a legal determination of the Town of Georgetown's compliance.

Opinion on Each Major Federal Program

In our opinion, the Town of Georgetown complied, in all material respects, with the types of compliance requirements referred to above that could have a direct and material effect on each of its major federal programs for the year ended April 30, 2018.

651 N. BEDFORD ST. EXT. • P.O. BOX 830 • GEORGETOWN, DE 19947-0830 • (302) 856-3900 • FAX (302) 856-3018
92 ATLANTIC AVE., SUITE D • P.O. BOX 477 • OCEAN VIEW, DE 19970 • (302) 539-5543 • FAX (302) 539-6527
107 WOLF CREEK BOULEVARD, SUITE 1 • DOVER, DE 19901 • (302) 678-1425 • FAX (302) 678-1468
WEBSITE: www.JUDS.com

Report on Internal Control over Compliance

Management of the Town of Georgetown is responsible for establishing and maintaining effective internal control over compliance with the types of compliance requirements referred to above. In planning and performing our audit of compliance, we considered the Town of Georgetown's internal control over compliance with the types of requirements that could have a direct and material effect on each major federal program to determine the auditing procedures that are appropriate in the circumstances for the purpose of expressing an opinion on compliance for each major federal program and to test and report on internal control over compliance in accordance with the Uniform Guidance, but not for the purpose of expressing an opinion on the effectiveness of internal control over compliance. Accordingly, we do not express an opinion on the effectiveness of the Town of Georgetown's internal control over compliance.

A *deficiency in internal control over compliance* exists when the design or operation of a control over compliance does not allow management or employees, in the normal course of performing their assigned functions, to prevent, or detect and correct, noncompliance with a type of compliance requirement of a federal program on a timely basis. A *material weakness in internal control over compliance* is a deficiency, or combination of deficiencies, in internal control over compliance, such that there is a reasonable possibility that material noncompliance with a type of compliance requirement of a federal program will not be prevented, or detected and corrected, on a timely basis. A *significant deficiency in internal control over compliance* is a deficiency, or a combination of deficiencies, in internal control over compliance with a type of compliance requirement of a federal program that is less severe than a material weakness in internal control over compliance, yet important enough to merit attention by those charged with governance.

Our consideration of internal control over compliance was for the limited purpose described in the first paragraph of this section and was not designed to identify all deficiencies in internal control over compliance that might be material weaknesses or significant deficiencies. We did not identify any deficiencies in internal control over compliance that we consider to be material weaknesses. However, material weaknesses may exist that have not been identified.

The purpose of this report on internal control over compliance is solely to describe the scope of our testing of internal control over compliance and the results of that testing based on the requirements of the Uniform Guidance. Accordingly, this report is not suitable for any other purpose.

Jefferson, Urian, Doane & Sterner, P.A.

Georgetown, Delaware
October 4, 2018

A PROFESSIONAL CORPORATION • CERTIFIED PUBLIC ACCOUNTANTS

DAVID C. DOANE, CPA
CHARLES H. STERNER, JR. CPA, CVA
SHELDON L. FORNEY, CPA
JAY M. STEVENS, CPA, PFS
ROGER R. REED, CPA
ELAINE E. GRAVES, CPA
BRYAN L. HUDSON, CPA
FREDERICK A. MAST, CPA

TRUITT W. JEFFERSON
(1937 - 2016)

DAVID R. URIAN, DIRECTOR
RETIRED

INDEPENDENT AUDITOR'S REPORT ON INTERNAL CONTROL OVER FINANCIAL REPORTING AND ON COMPLIANCE AND OTHER MATTERS BASED ON AN AUDIT OF FINANCIAL STATEMENTS PERFORMED IN ACCORDANCE WITH *GOVERNMENT AUDITING STANDARDS*

To the Honorable Mayor and Council
Town of Georgetown
Georgetown, Delaware

We have audited, in accordance with the auditing standards generally accepted in the United States of America and the standards applicable to financial audits contained in *Government Auditing Standards* issued by the Comptroller General of the United States, the financial statements of the governmental activities, the business-type activities, and each major fund of the Town of Georgetown, as of and for the year ended April 30, 2018, and the related notes to the financial statements, which collectively comprise the Town of Georgetown's basic financial statements, and have issued our report thereon dated October 4, 2018.

Internal Control over Financial Reporting

In planning and performing our audit of the financial statements, we considered the Town of Georgetown's internal control over financial reporting (internal control) to determine the audit procedures that are appropriate in the circumstances for the purpose of expressing our opinions on the financial statements, but not for the purpose of expressing an opinion on the effectiveness of the Town of Georgetown's internal control. Accordingly, we do not express an opinion on the effectiveness of the Town of Georgetown's internal control.

A *deficiency in internal control* exists when the design or operation of a control does not allow management or employees, in the normal course of performing their assigned functions, to prevent, or detect and correct, misstatements on a timely basis. A *material weakness* is a deficiency, or a combination of deficiencies, in internal control such that there is a reasonable possibility that a material misstatement of the entity's financial statements will not be prevented, or detected and corrected on a timely basis. A *significant deficiency* is a deficiency, or a combination of deficiencies, in internal control that is less severe than a material weakness, yet important enough to merit attention by those charged with governance.

Our consideration of internal control was for the limited purpose described in the first paragraph of this section and was not designed to identify all deficiencies in internal control that might be material weaknesses or significant deficiencies and therefore, material weaknesses or significant deficiencies may exist that have not been identified. Given these limitations, during our audit we did not identify any deficiencies in internal control that we consider to be material weaknesses. We did identify certain deficiencies in internal control, described in the accompanying schedule of findings and questioned costs that we consider to be significant deficiencies as detailed in Finding 2018-001.

651 N. BEDFORD ST. EXT. • P.O. BOX 830 • GEORGETOWN, DE 19947-0830 • (302) 856-3900 • FAX (302) 856-3018
92 ATLANTIC AVE., SUITE D • P.O. BOX 477 • OCEAN VIEW, DE 19970 • (302) 539-5543 • FAX (302) 539-6527
107 WOLF CREEK BOULEVARD, SUITE 1 • DOVER, DE 19901 • (302) 678-1425 • FAX (302) 678-1468
WEBSITE: www.JUDS.com

Compliance and Other Matters

As part of obtaining reasonable assurance about whether the Town of Georgetown's financial statements are free from material misstatement, we performed tests of its compliance with certain provisions of laws, regulations, contracts, and grant agreements, noncompliance with which could have a direct and material effect on the determination of financial statement amounts. However, providing an opinion on compliance with those provisions was not an objective of our audit, and accordingly, we do not express such an opinion. The results of our tests disclosed no instances of noncompliance or other matters that are required to be reported under *Government Auditing Standards*.

The Town of Georgetown's Response to Findings

The Town of Georgetown's response to the finding identified in our audit is described in the accompanying schedule of findings and questioned costs. The Town of Georgetown's response was not subjected to the auditing procedures applied in the audit of the financial statements and, accordingly, we express no opinion on it.

Purpose of this Report

The purpose of this report is solely to describe the scope of our testing of internal control and compliance and the results of that testing, and not to provide an opinion on the effectiveness of the entity's internal control or on compliance. This report is an integral part of an audit performed in accordance with *Government Auditing Standards* in considering the entity's internal control and compliance. Accordingly, this communication is not suitable for any other purpose.

Jefferson, Urian, Doane & Sterner, P.A.

Georgetown, Delaware
October 4, 2018

SECTION I - SUMMARY OF INDEPENDENT AUDITOR'S RESULTS

Financial Statements

Type of auditor's report issued:	Unmodified			
Internal control over financial reporting:				
Material weakness(es) identified?		Yes	X	No
Significant deficiency(ies) identified?	X	Yes		None Reported
Noncompliance material to financial statements noted?		Yes	X	No

Federal Awards

Type of auditor's report issued on compliance for major programs:	Unmodified			
Internal control over major programs:				
Material weakness(es) identified?		Yes	X	No
Significant deficiency(ies) identified?		Yes	X	None Reported
Any audit findings disclosed that are required to be reported in accordance with 2 CFR Section 200.516(a)?		Yes	X	No

Identification of Major Programs:

PROGRAM NAME	CFDA Number(s)
Community Facilities Loans and Grants	10.766

Dollar threshold used to distinguish between type A and type B programs:	$ 750,000			
Auditee qualified as low-risk auditee?	X	Yes		No

SECTION II - FINDINGS RELATED TO THE FINANCIAL STATEMENTS REPORTED IN ACCORDANCE WITH *GOVERNMENT AUDITING STANDARDS*

Significant Deficiencies

Finding 2018-001 Financial Statements

Condition: The Town of Georgetown does not have an employee with the technical accounting expertise to completely prepare the Town's financial statements and notes in conformity with accounting principles generally accepted in the United States of America without a significant risk of a potential misstatement.

Cause: The Town does not have the opportunity and the means to employ personnel who possess the knowledge and expertise who can properly prepare financial statements and notes in accordance with specified standards.

Effect: The Town's financial reports could have a significant risk of being potentially misstated.

Criteria: Preparation of financial statements and accounting adjustments are functions that should be performed by management.

Recommendation: The Town of Georgetown may wish to consider alternatives to improve control and expertise over the financial reporting process in the future.

Views of Responsible Official and Planned Corrective Actions: *"Due to continued limited financial resources, the Town remains in a position whereby we are unable to hire an employee with the sufficient technical accounting expertise to completely prepare the Town's financial statements and notes in conformity with accounting principles generally accepted in the United States of America. Our current staff, involved with the processing of the financial information, do possess bachelor and advanced degrees in Accounting and Business Administration. As part of our budget process, we will investigate the possibility of hiring an internal resource or external contractor to address this deficiency."*

SECTION III - FINDINGS RELATED TO THE FEDERAL AWARDS

None - Current Year

PRIOR YEAR FINDINGS RELATED TO THE FINANCIAL STATEMENTS REPORTED IN ACCORDANCE WITH *GOVERNMENT AUDITING STANDARDS*

Finding 2017-001 Financial Statements (Significant Deficiency)

Condition: The Town of Georgetown does not have an employee with the technical accounting expertise to completely prepare the Town's financial statements and notes in conformity with accounting principles generally accepted in the United States of America without a significant risk of a potential misstatement.

Management's Assessment of Current Year Status: *"Due to continued limited financial resources, the Town remains in a position whereby we are unable to hire an employee with the sufficient technical accounting expertise to completely prepare the Town's financial statements and notes in conformity with accounting principles generally accepted in the United States of America.*

Our current staff, involved with the processing of the financial information, do possess bachelor and advanced degrees in Accounting and Business Administration.

As part of our budget process, we will investigate the possibility of hiring an internal resource or external contractor to address this deficiency."

Auditor Assessment of Status: Not resolved. Repeated as Finding 2018-001.

PRIOR YEAR FINDINGS RELATED TO THE FEDERAL AWARDS

None - Prior year

Jefferson, Urian, Doane & Sterner, P.A.

A PROFESSIONAL CORPORATION • CERTIFIED PUBLIC ACCOUNTANTS

DAVID C. DOANE, CPA
CHARLES H. STERNER, JR. CPA, CVA
SHELDON L. FORNEY, CPA
JAY M. STEVENS, CPA, PFS
ROGER R. REED, CPA
ELAINE E. GRAVES, CPA
BRYAN L. HUDSON, CPA
FREDERICK A. MAST, CPA

TRUITT W. JEFFERSON
(1937 - 2016)

DAVID R. URIAN, DIRECTOR
RETIRED

MANAGEMENT LETTER

To the Honorable Mayor and Council
Town of Georgetown
Georgetown, Delaware

We thank you and the Town's employees for the cooperation given us during our recent audit of the financial statements of the Town of Georgetown. During our engagement, we had the opportunity to observe several areas of the Town's operations. In planning and performing our audit of the financial statements of the Town of Georgetown for the year ended April 30, 2018, we considered its internal control in order to determine our audit procedures for the purpose of expressing an opinion on the financial statements and not to provide assurance on the internal control. The following comments and recommendations relate to the Town's accounting, financial, and administrative policies that we observed during the course of our engagement.

DISBURSEMENT AUTHORIZATION

The Town should evaluate its check signing procedures when processing cashier checks for bank accounts that do not issue physical checks. The Town should also retain documentation that the remaining two authorized council members have authorized the disbursement. Currently, the Town requires three signers on all checks for approval of expenditures.

DISBURSEMENT DOCUMENTATION

The Town should update its disbursement process to obtain copies or archive electronic images of all its cancelled checks. This process would substantiate that all of the required check signers have formally approved the expenditures during their review of invoices. Certain bank accounts for the Town currently require personnel to request the images. Maintaining the necessary records for approvals of expenditures is critical for adhering to the Town's internal control policies.

FIXED ASSETS

The Town should adopt a formal written policy for the inventory accounting process for the Town's fixed assets. The written policy needs to adhere to both federally funded assets and State and local provisions and should at least include procedures for equipment and other fixed asset management and maintaining adequate records to ensure that all of the Town's assets have been properly accounted for and identified. The procedures must be done every two years for compliance with federal provisions. For example, equipment inventory management for federally funded programs needs to include provisions for documentation of the assets and any relevant exception notes for those assets when comparing them to the Town's accounting records; what procedures were done to resolve those issues; and any other disposal adjustments needed that require the Town to communicate the status of those assets to the applicable funding agencies. These records should be maintained and archived properly as governed by the Town's recordkeeping policies.

651 N. BEDFORD ST. EXT. • P.O. BOX 830 • GEORGETOWN, DE 19947-0830 • (302) 856-3900 • FAX (302) 856-3018
92 ATLANTIC AVE., SUITE D • P.O. BOX 477 • OCEAN VIEW, DE 19970 • (302) 539-5543 • FAX (302) 539-6527
107 WOLF CREEK BOULEVARD, SUITE 1 • DOVER, DE 19901 • (302) 678-1425 • FAX (302) 678-1468
WEBSITE: www.JUDS.com

DISPOSING OF GRANT FUNDED ASSETS

The Town does not have policies and procedures in place for disposition of assets that have been acquired from federal and State sources. These sources include assets that were either purchased from grant monies or received through noncash donations. Generally, these assets require that the Town report to the awarding agencies that a disposal has taken place and whether or not funds from the transaction will need to be remitted back to the agencies. The Town had assets that were disposed of during the year that may have met this criteria for reporting. The Town did not have the documentation to indicate whether communications were made or required. The Town needs to consult with the granting agencies to determine what policies and procedures are required upon disposition of these types of assets.

SUSPENSION AND DEBARMENT POLICIES

The Town does not have a formal policy to monitor and ensure that all vendors who participate in federally funded programs are suspended or debarred from those activities. It only has a policy for construction-related contract services that are provided to the Town. Professional services contractors such as engineers and consultants are not exempted from the federal government procurement provisions. The Town should implement a policy to ensure that all vendors, including professional services contracts, are not suspended or debarred from participating in federally funded programs.

WRITTEN POLICY FOR ADOPTING THE UNIFORM GUIDANCE

The Town should have a formal written policy describing the policies and procedures related to adopting the new Uniform Guidance for administrative requirements and cost principles for federal program management to mitigate the risk of noncompliance. These procedures should include updates related to procurement procedures and suspension and debarment procedures for federal related programs. While the Town has a process for complying with federal provisions, this process should be updated and written to provide specific guidelines for the Town as required by each federal program within the *Codification of Federal Awards* (CFR) and can be readily available when communicating the process to various levels of management as needed.

This report is intended solely for the information and use of the Mayor and Council, management and federal and state awarding agencies, and should not be used by anyone other than these specified parties. We will be calling on you to discuss these points in further detail and can assist you with the implementation of these recommendations. Again, thank you and the staff for the cooperation given us. It is a pleasure to serve the Town of Georgetown

Respectfully Submitted,

Jefferson, Urian, Doane & Steiner, P.A.

Georgetown, Delaware
October 4, 2018

Area of Interest

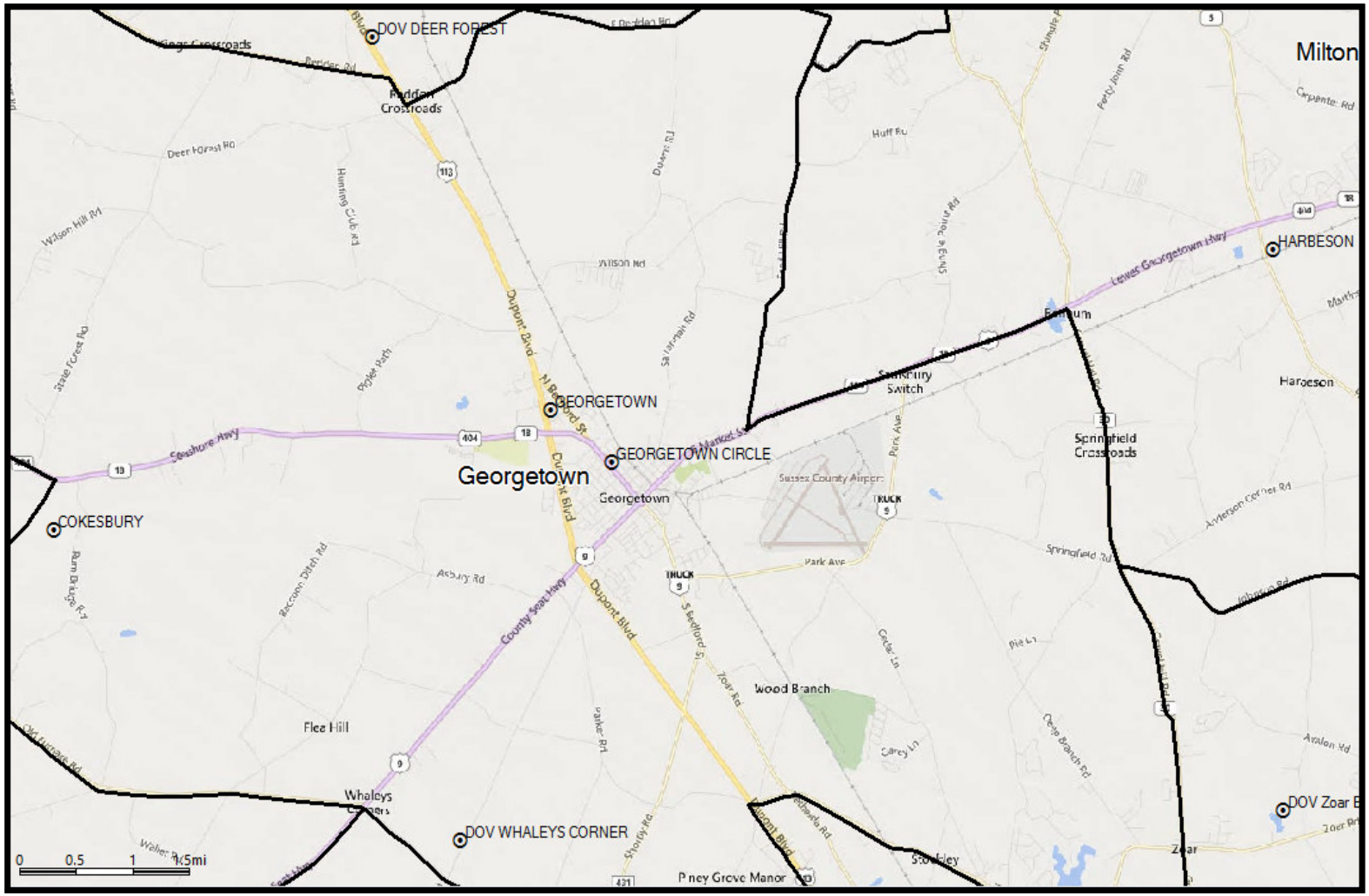

dBm ENGINEERING, P.C.

PO Box 165
Fairview Village, PA 19409
Phone: 610.304.2024
info@dBmEng.com

Verizon Wireless Existing Best Server Coverage

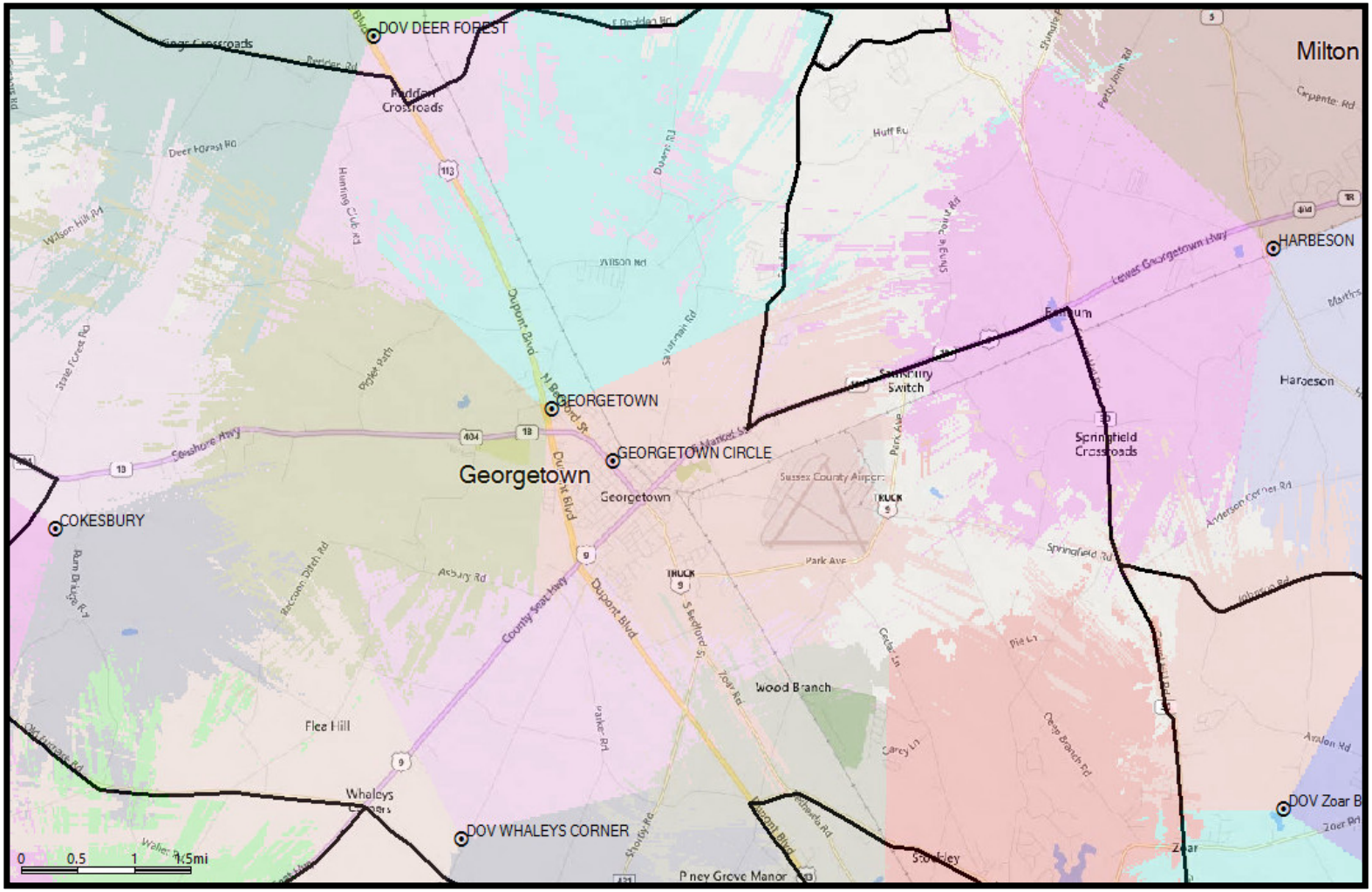

dBm ENGINEERING, P.C.

PO Box 165
Fairview Village, PA 19409
Phone: 610.304.2024
info@dBmEng.com

Verizon Wireless Proposed Best Server Coverage

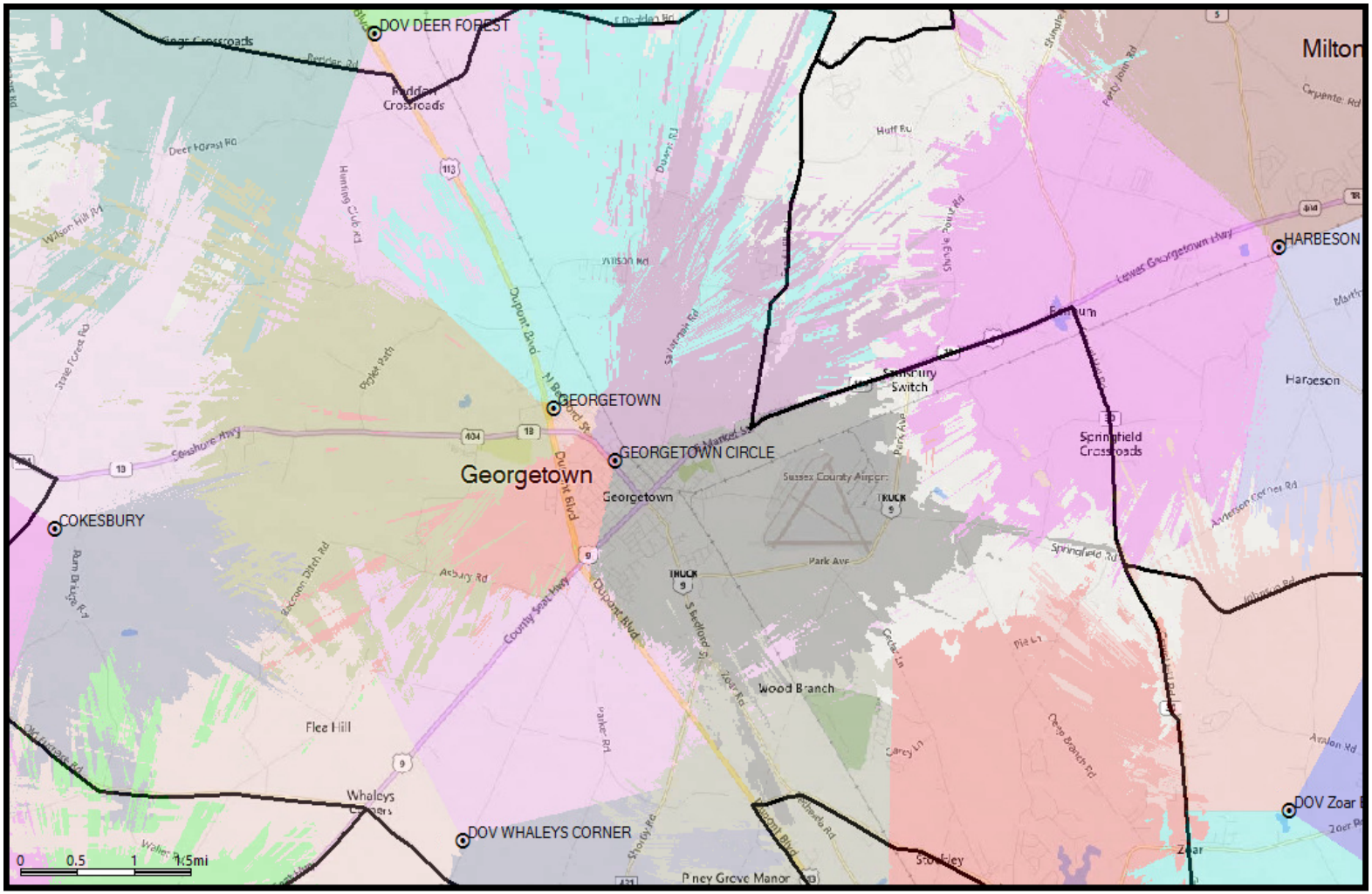

dBm ENGINEERING, P.C.

PO Box 165
Fairview Village, PA 19409
Phone: 610.304.2024
info@dBmEng.com

Verizon Wireless Proposed Best Server Coverage

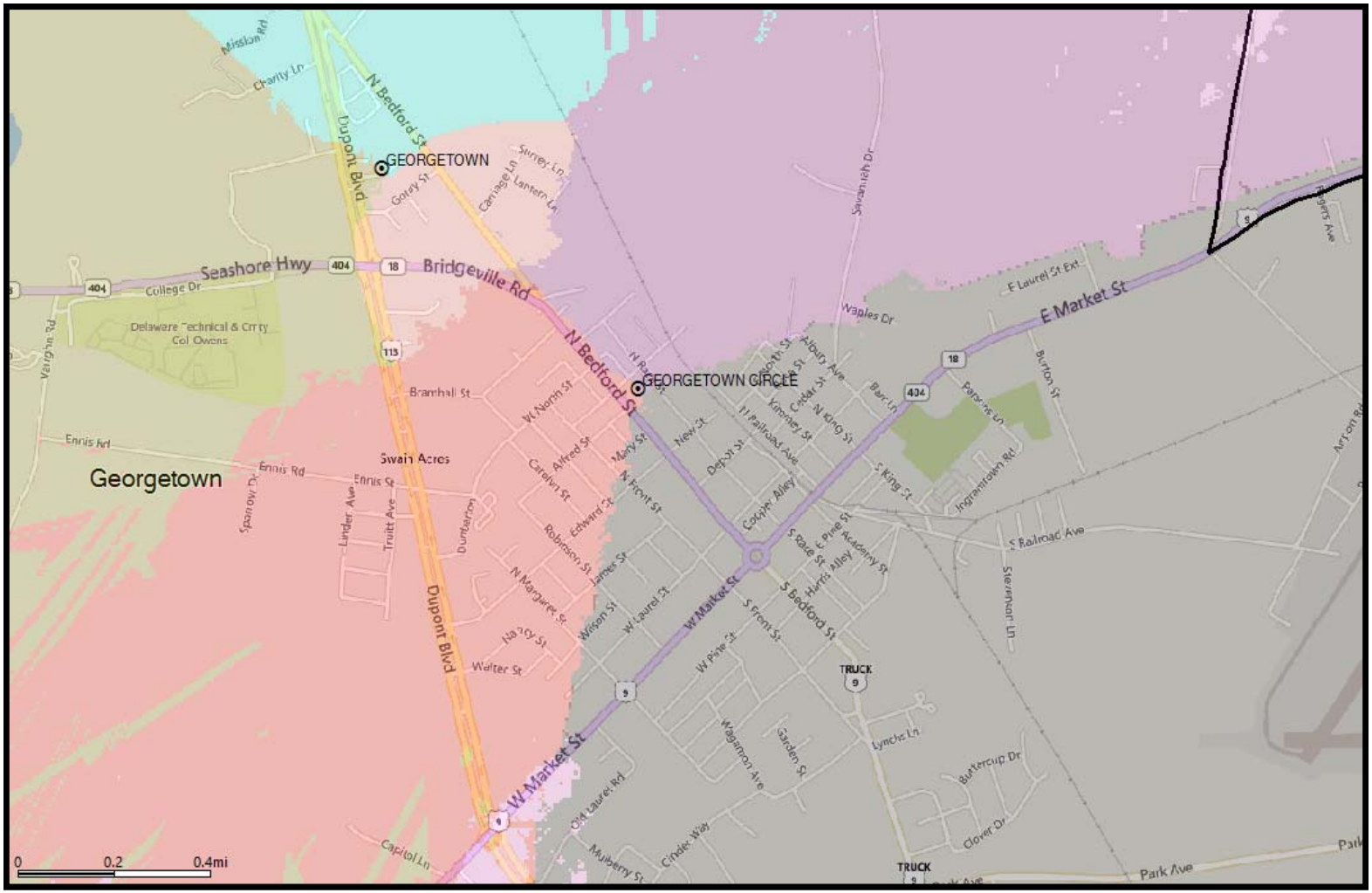

dBm ENGINEERING, P.C.

PO Box 165
Fairview Village, PA 19409
Phone: 610.304.2024
info@dBmEng.com

“Georgetown” Southeasterly Facing Sector’s Data Trend

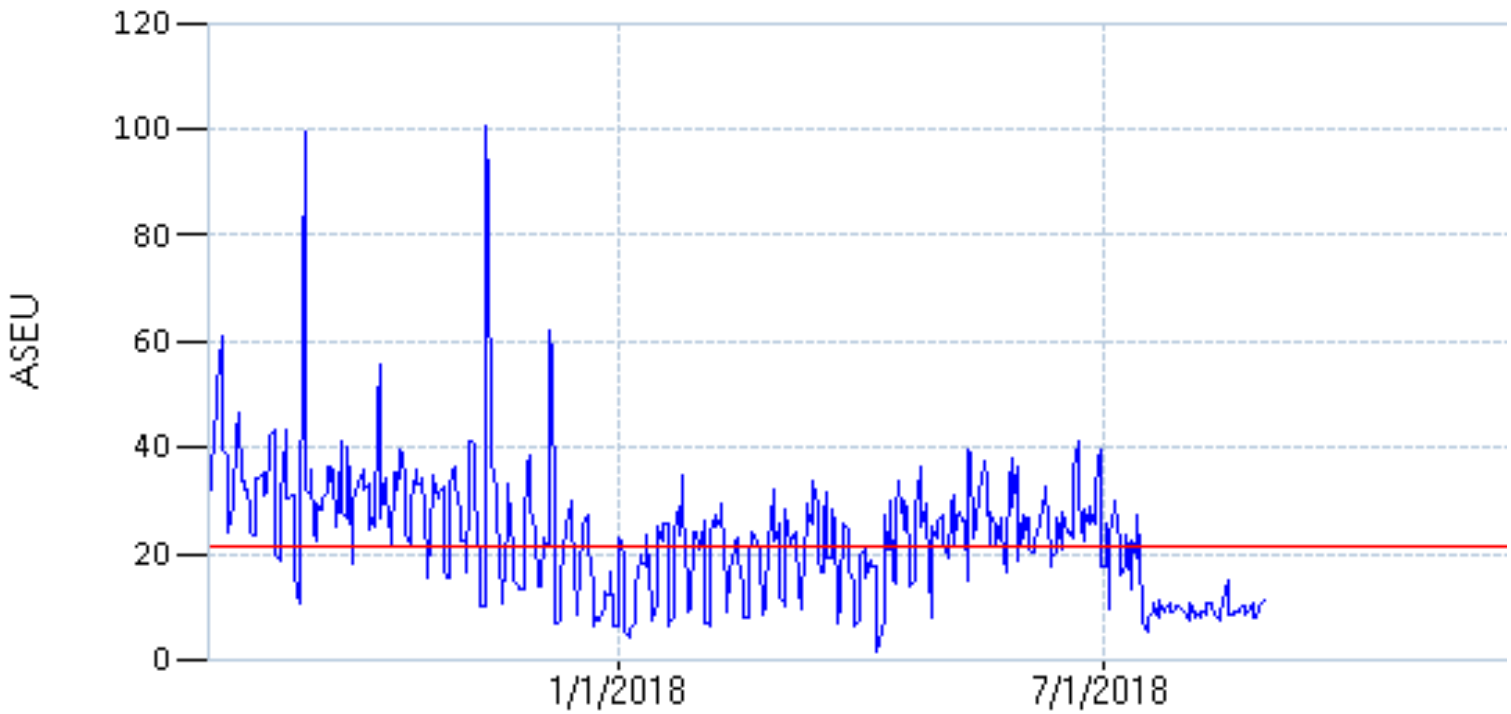

dBm ENGINEERING, P.C.

PO Box 165
Fairview Village, PA 19409
Phone: 610.304.2024
info@dBmEng.com

Cell Name	Structure Type	Center Line (feet)	Street Address
SOUTH GEORGETOWN	Lattice	120	26055 Rt. 113 (Dupont Blvd.)
HARBESON	Lattice	130	Rt 5 South (Main Street)
GEORGETOWN	Lattice	148	512 North Dupont Hwy
DEER FOREST	MONOPOLE	169	16847 DUPONT BLVD
WHALEYS CORNER	Monopole	145	24387 E. Trap Pond Road
COKESBURY	Lattice	159	14908 Cokesbury Road
ZOAR BELLA	Monopole	145	24296 Lawson Road

dBm ENGINEERING, P.C.

PO Box 165
Fairview Village, PA 19409
Phone: 610.304.2024
info@dBmEng.com

PROJECT NOTES

1. SITE INFORMATION OBTAINED FROM THE FOLLOWING:
   A. LIMITED FIELD OBSERVATION BY MASER CONSULTING ON 08/01/18.
   B. A TOPOGRAPHIC SURVEY ENTITLED "CELL SITE SURVEY DOV GEORGETOWN CIRCLE" PREPARED BY MASER CONSULTING, P.A. OF MT. LAUREL, NJ LAST REVISED 09/12/18.
2. THE CONTRACTOR SHALL COMPLY WITH ALL APPLICABLE CODES, ORDINANCES, LAWS AND REGULATIONS OF ALL MUNICIPALITIES, UTILITY COMPANIES OR OTHER PUBLIC/GOVERNING AUTHORITIES.
3. THE CONTRACTOR SHALL BE RESPONSIBLE FOR OBTAINING ALL PERMITS AND INSPECTIONS THAT MAY BE REQUIRED BY ANY FEDERAL, STATE, COUNTY OR MUNICIPAL AUTHORITIES.
4. THE CONTRACTOR SHALL NOTIFY THE CONSTRUCTION MANAGER, IN WRITING, OF ANY CONFLICTS, ERRORS OR OMISSIONS PRIOR TO THE SUBMISSION OF BIDS OR PERFORMANCE OF WORK.
5. THE CONTRACTOR SHALL BE RESPONSIBLE FOR PROTECTING ALL EXISTING SITE IMPROVEMENTS PRIOR TO COMMENCING CONSTRUCTION. THE CONTRACTOR SHALL REPAIR ANY DAMAGE AS A RESULT OF CONSTRUCTION OF THIS FACILITY AT THE CONTRACTOR'S EXPENSE TO THE SATISFACTION OF THE OWNER.
6. THE SCOPE OF WORK FOR THIS PROJECT SHALL INCLUDE PROVIDING ALL MATERIALS, EQUIPMENT AND LABOR REQUIRED TO COMPLETE THIS PROJECT. ALL EQUIPMENT SHALL BE INSTALLED IN ACCORDANCE WITH MANUFACTURER'S RECOMMENDATIONS.
7. THE CONTRACTOR SHALL VISIT THE PROJECT SITE PRIOR TO SUBMITTING THE BID TO VERIFY THAT THE PROJECT CAN BE CONSTRUCTED IN ACCORDANCE WITH THE CONTRACT DOCUMENTS AND CONSTRUCTION DRAWINGS.
8. THE CONTRACTOR SHALL VERIFY ALL EXISTING DIMENSIONS AND CONDITIONS PRIOR TO COMMENCING ANY WORK. ALL DIMENSIONS OF EXISTING CONSTRUCTION SHOWN ON THESE DRAWINGS MUST BE VERIFIED. THE CONTRACTOR SHALL NOTIFY THE CONSTRUCTION MANAGER OF ANY DISCREPANCIES PRIOR TO ORDERING MATERIAL OR PROCEEDING WITH CONSTRUCTION.
9. SINCE THE CELL SITE MAY BE ACTIVE, ALL SAFETY PRECAUTIONS MUST BE TAKEN WHEN WORKING AROUND HIGH LEVELS OF ELECTROMAGNETIC RADIATION. EQUIPMENT SHOULD BE SHUTDOWN PRIOR TO PERFORMING ANY WORK THAT COULD EXPOSE THE WORKERS TO DANGER. PERSONAL RF EXPOSURE MONITORS ARE REQUIRED TO BE WORN TO ALERT OF ANY POTENTIALLY DANGEROUS EXPOSURE LEVELS.
10. THE PROPOSED FACILITY WILL CAUSE AN INSIGNIFICANT OR "DE-MINIMUS" INCREASE IN STORM WATER RUNOFF, THEREFORE, NO DRAINAGE STRUCTURES ARE PROPOSED.
11. NO NOISE, SMOKE, DUST OR ODOR WILL RESULT FROM THIS FACILITY AS TO CAUSE A NUISANCE.
12. THE FACILITY IS UNMANNED AND NOT FOR HUMAN HABITATION (NO HANDICAP ACCESS IS REQUIRED).
13. THE FACILITY DOES NOT REQUIRE POTABLE WATER OR SANITARY SERVICE.
14. CONTRACTOR SHALL VERIFY ANTENNA ELEVATION AND AZIMUTHS WITH RF ENGINEERING PRIOR TO INSTALLATION.
15. THE TOWER, MOUNTS AND ANTENNAS SHALL BE DESIGNED TO MEET EIA/TIA-222-G AS PER IBC REQUIREMENTS.
16. ALL STRUCTURAL ELEMENTS SHALL BE HOT DIPPED GALVANIZED STEEL.
17. CONTRACTOR MUST FIELD LOCATE ALL EXISTING UNDERGROUND UTILITIES PRIOR TO ANY EXCAVATION.
18. CONSTRUCTION SHALL NOT COMMENCE UNTIL COMPLETION OF A PASSING STRUCTURAL ANALYSIS CERTIFIED BY A LICENSED PROFESSIONAL ENGINEER. THE STRUCTURAL ANALYSIS IS TO BE PERFORMED BY OTHERS.
19. CONTRACTOR SHALL CONTACT STATE SPECIFIC ONE CALL SYSTEM THREE WORKING DAYS PRIOR TO ANY EARTH MOVING ACTIVITIES.

COPYRIGHT © 2018
MASER CONSULTING P.A.
ALL RIGHTS RESERVED
THIS DRAWING AND ALL THE INFORMATION CONTAINED HEREIN IS AUTHORIZED FOR USE ONLY BY THE PARTY FOR WHOM THE WORK WAS CONTRACTED OR TO WHOM IT IS CERTIFIED. THIS DRAWING MAY NOT BE COPIED, REUSED, DISCLOSED, DISTRIBUTED OR RELIED UPON FOR ANY OTHER PURPOSE WITHOUT THE EXPRESS WRITTEN CONSENT OF MASER CONSULTING P.A.

By: MGRAUBART

640-DV Georgetown Circle,335 Rte 30 eng(T-1

verizon

SITE NAME: DOV GEORGETOWN CIRCLE

335 N. RACE STREET
GEORGETOWN, DE 19947
SUSSEX COUNTY

VICINITY MAP

CODE COMPLIANCE

ALL WORK AND MATERIALS SHALL BE PERFORMED AND INSTALLED IN ACCORDANCE WITH THE CURRENT EDITIONS OF THE FOLLOWING CODES AS ADOPTED BY THE LOCAL GOVERNING AUTHORITIES. NOTHING IN THESE PLANS IS TO BE CONSTRUED TO PERMIT WORK NOT CONFORMING TO THE LATEST EDITIONS OF THE FOLLOWING CODES.

1. 2012 INTERNATIONAL BUILDING CODE
2. NFPA 70, NATIONAL ELECTRICAL CODE, 2014
3. DELAWARE STATE FIRE PREVENTION REGULATIONS 2015
4. AMERICAN INSTITUTE OF STEEL CONSTRUCTION 360-10
5. AMERICAN CONCRETE INSTITUTE
6. TIA-222-G
7. TIA 607 FOR GROUNDING
8. INSTITUTE FOR ELECTRICAL AND ELECTRONICS ENGINEERS 81 IEEE C2 LATEST EDITION
9. TELCORDIA GR-1275
10. ANSI T1.311
11. PROPOSED USE: UNMANNED TELECOM FACILITY
12. HANDICAP REQUIREMENTS: FACILITY IS UNMANNED AND NOT FOR HUMAN HABITATION. HANDICAPPED ACCESS NOT REQUIRED.
13. CONSTRUCTION TYPE: IIB
14. USE GROUP: U

PROJECT INFORMATION

SITE INFORMATION

LATITUDE:	N 38° 41' 41.8" (NAD 83)
LONGITUDE:	W 75° 23' 25.2" (NAD 83)
GROUND ELEVATION:	50.5'± AMSL (NAVD 88)
COUNTY:	SUSSEX COUNTY
ZONING DISTRICT:	UB-2 NEIGHBORHOOD BUSINESS
APN:	135-14.20-97.00
TAX MAP#:	135-14.20

APPLICANT

COMPANY:	CELLCO PARTNERSHIP d/b/a VERIZON WIRELESS
ADDRESS:	512 TOWNSHIP LINE ROAD BUILDING 2, FLOOR 3
CITY, STATE, ZIP:	BLUE BELL, PA 19422

PROPERTY OWNER

COMPANY:	TOWN OF GEORGETOWN
ADDRESS:	39 THE CIRCLE
CITY, STATE, ZIP:	GEORGETOWN, DE 19947

SITE ACQUISITION

COMPANY:	WIRELESS ACCESS TECHNOLOGIES, INC
CONTACT:	SUE MANCHEL
PHONE:	(267) 253-2762

CONSTRUCTION MANAGER

COMPANY:	CELLCO PARTNERSHIP d/b/a VERIZON WIRELESS
ADDRESS:	512 TOWNSHIP LINE ROAD, BUILDING 2, FLOOR 3
CITY, STATE, ZIP:	BLUE BELL, PA 19422
CONTACT:	TARRA GOSNELL
PHONE:	(610) 213-8328

ENGINEER

COMPANY:	MASER CONSULTING P.A.
ADDRESS:	2000 MIDLANTIC DRIVE, SUITE 100
CITY, STATE, ZIP:	MT. LAUREL, NJ 08054
CONTACT:	MATT GRAUBART, P.E.
PHONE:	(856) 797-0412
E-MAIL:	MGRAUBART@MASERCONSULTING.COM

LOCATION INFORMATION

POWER PROVIDER

NAME:	DELMARVA
PHONE:	1 (800) 232-5460

TELEPHONE PROVIDER

COMPANY:	VERIZON
PHONE:	1 (800) VERIZON

POLICE

COMPANY:	GEORGETOWN POLICE DEPARTMENT
ADDRESS:	335 N. RACE STREET
CITY, STATE, ZIP:	GEORGETOWN, DE 19947
PHONE:	(302) 856-6613

FIRE

COMPANY:	GEORGETOWN FIRE COMPANY
ADDRESS:	100 S. BEDFORD STREET
CITY, STATE, ZIP:	GEORGETOWN, DE 19947
PHONE:	(302) 856-7700

IN CASE OF EMERGENCY, CALL 9-1-1

SHEET INDEX

SHEET	DESCRIPTION
T-1	TITLE SHEET
Z-1	ZONING INFORMATION
Z-2	SITE PLAN
Z-3	COMPOUND PLAN AND ELEVATION VIEW
Z-4	SOIL EROSION AND SEDIMENT CONTROL PLAN
A-1	CONSTRUCTION DETAILS
A-2	CONSTRUCTION DETAILS
A-3	CONSTRUCTION DETAILS
A-4	CONSTRUCTION DETAILS
A-5	CONSTRUCTION DETAILS
A-6	CONSTRUCTION DETAILS
A-7	CONSTRUCTION DETAILS
A-8	CONSTRUCTION DETAILS

MASER CONSULTING P.A.
Customer Loyalty through Client Satisfaction
www.maserconsulting.com
Engineers ■ Planners ■ Surveyors
Landscape Architects ■ Environmental Scientists
Office Locations:
■ Red Bank, NJ ■ Clinton, NJ ■ Hamilton, NJ ■ Marmora, NJ ■ Mt. Arlington, NJ ■ Mt. Laurel, NJ
■ Sterling, VA ■ Norfolk, VA ■ Albuquerque, NM ■ Albany, NY ■ Chestnut Ridge, NY ■ Newburgh, NY
■ Hawthorne, NY ■ Lehigh Valley, PA ■ Exton, PA ■ Philadelphia, PA ■ Columbia, MD ■ Tampa, FL
State of D.E. Certificate of Authorization: 2840

Copyright © 2018 Maser Consulting P.A. All Rights Reserved. This drawing and all the information contained herein is authorized for use only by the party for whom the services were contracted or to whom it is certified. This drawing may not be copied, reused, disclosed, distributed or relied upon for any other purpose without the express written consent of Maser Consulting P.A.

verizon

CELLCO PARTNERSHIP d/b/a
VERIZON WIRELESS
512 TOWNSHIP LINE ROAD
BUILDING 2, FLOOR 3
BLUE BELL, PA 19422

811 Know what's below. Call before you dig.
PROTECT YOURSELF
ALL STATES REQUIRE NOTIFICATION OF EXCAVATORS, BUILDERS OR ANY PERSON PREPARING TO DISTURB THE EARTH'S SURFACE ANYWHERE IN ANY STATE
FOR STATE SPECIFIC DIRECT PHONE NUMBERS VISIT: WWW.CALL811.COM

SCALE:	JOB NUMBER:
AS SHOWN	18960085A

REV	DATE	DESCRIPTION	DRAWN BY	CHECKED BY
0	11/02/18	ISSUED FOR REVIEW	MEG	MPC
A	11/01/18	ISSUED FOR REVIEW	MEG	MEG

MICHAEL P. CLEARY LICENSE No. 19205 DELAWARE PROFESSIONAL ENGINEER

IT IS A VIOLATION OF LAW FOR ANY PERSONS, UNLESS THEY ARE ACTING UNDER THE DIRECTION OF THE RESPONSIBLE LICENSED PROFESSIONAL ENGINEER, TO ALTER THIS DOCUMENT.

SITE NAME:
DOV GEORGETOWN CIRCLE
335 N. RACE STREET
GEORGETOWN, DE 19947
SUSSEX COUNTY

MT. LAUREL OFFICE
2000 Midlantic Drive
Suite 100
Mt. Laurel NJ 08054
Phone: .856.797.0412
Fax: .856.722.1120
email: solutions@maserconsulting.com

SHEET TITLE: TITLE SHEET

SHEET NUMBER: T-1

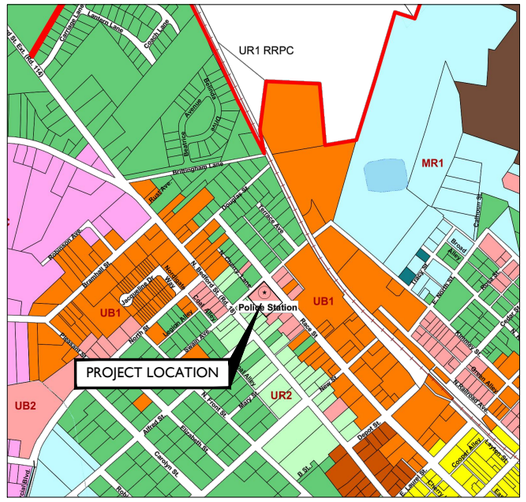

ZONING MAP

500 400 300 200 100 0 250 500 1000

SCALE : 1" = 500' FOR 22"X34"
(SCALE : 1" = 1000' FOR 11"X17")

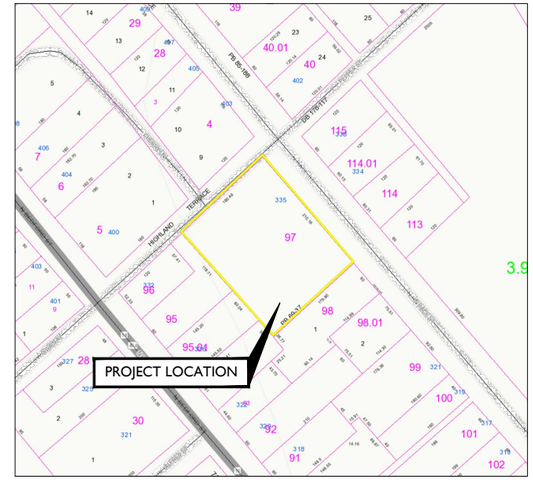

TAX MAP # 135-14.20

100 80 60 40 20 0 50 100 200

SCALE : 1" = 100' FOR 22"X34"
(SCALE : 1" = 200' FOR 11"X17")

TAX DITCH MAP

200 160 120 80 40 0 100 200 400

SCALE : 1" = 200' FOR 22"X34"
(SCALE : 1" = 400' FOR 11"X17")

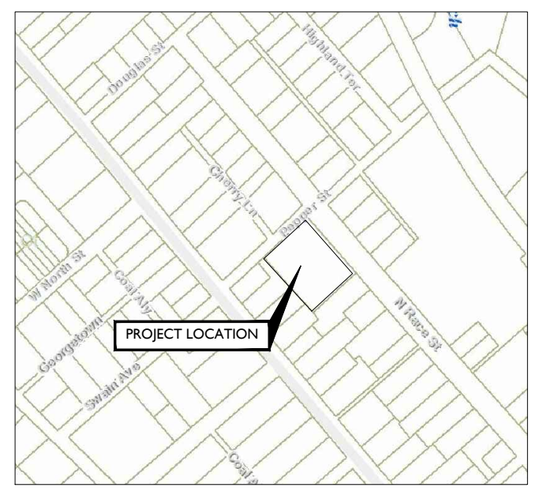

WETLANDS MAP

200 160 120 80 40 0 100 200 400

SCALE : 1" = 200' FOR 22"X34"
(SCALE : 1" = 400' FOR 11"X17")

MASER CONSULTING P.A.
Customer Loyalty through Client Satisfaction
www.maserconsulting.com
Engineers ■ Planners ■ Surveyors
Landscape Architects ■ Environmental Scientists
Office Locations:
■ Red Bank, NJ ■ Clinton, NJ ■ Hamilton, NJ ■ Marmora, NJ ■ Mt. Arlington, NJ ■ Mt. Laurel, NJ
■ Sterling, VA ■ Norfolk, VA ■ Albuquerque, NM ■ Albany, NY ■ Chestnut Ridge, NY ■ Newburgh, NY
■ Hawthorne, NY ■ Lehigh Valley, PA ■ Exton, PA ■ Philadelphia, PA ■ Columbia, MD ■ Tampa, FL
State of D.E. Certificate of Authorization: 2840

Copyright © 2018 Maser Consulting P.A. All Rights Reserved. This drawing and all the information contained herein is authorized for use only by the party for whom the services were contracted or to whom it is certified. This drawing may not be copied, reused, disclosed, distributed or relied upon for any other purpose without the express written consent of Maser Consulting P.A.

verizon

CELLCO PARTNERSHIP d/b/a
VERIZON WIRELESS
512 TOWNSHIP LINE ROAD
BUILDING 2, FLOOR 3
BLUE BELL, PA 19422

811 Know what's below. Call before you dig.

PROTECT YOURSELF
ALL STATES REQUIRE NOTIFICATION OF EXCAVATORS, DESIGNERS OR ANY PERSON PREPARING TO DISTURB THE EARTH'S SURFACE ANYWHERE IN ANY STATE

FOR STATE SPECIFIC DIRECT PHONE NUMBERS VISIT:
WWW.CALL811.COM

SCALE: AS SHOWN
JOB NUMBER: 18960085A

REV	DATE	DESCRIPTION	DRAWN BY	CHECKED BY
0	11/02/18	ISSUED FOR REVIEW	MEG	MPC
A	11/01/18	ISSUED FOR REVIEW		MEG

MICHAEL P. CLEARY
LICENSE
No. 19205
MICHAEL P. CLEARY
DELAWARE PROFESSIONAL ENGINEER - LICENSE NUMBER: 19205
DELAWARE
PROFESSIONAL ENGINEER

IT IS A VIOLATION OF LAW FOR ANY PERSONS, UNLESS THEY ARE ACTING UNDER THE DIRECTION OF THE RESPONSIBLE LICENSED PROFESSIONAL ENGINEER, TO ALTER THIS DOCUMENT.

SITE NAME:

DOV GEORGETOWN CIRCLE
335 N. RACE STREET
GEORGETOWN, DE 19947
SUSSEX COUNTY

MT. LAUREL OFFICE
2000 Midlantic Drive
Suite 100
Mt. Laurel NJ 08054
Phone: 856.797.0412
Fax: 856.722.1120
email: solutions@maserconsulting.com

SHEET TITLE: SITE PLAN

SHEET NUMBER: Z-1

04-DOV-Georgetown Circle,ZD-Rev 0.dwg(Z-1 By: MGALIARAT

NOTES:

1. THIS PROPOSAL IS FOR AN UNMANNED TELECOMMUNICATIONS FACILITY CONSISTING OF THE PLACEMENT OF PANEL ANTENNAS ON A PROPOSED MONOPOLE AND EQUIPMENT CABINETS ON A PROPOSED CONCRETE PAD WITH CANOPY, AN OUTDOOR STANDBY GENERATOR, AND ASSOCIATED APPURTENANCES WITHIN A PROPOSED FENCED COMPOUND.
2. EXTERIOR SIGNS ARE NOT PROPOSED EXCEPT AS REQUIRED BY THE FCC
3. TOTAL AREA OF DISTURBANCE UNDER THIS PROPOSAL: 2,500± S.F.
4. RUBBISH, STUMPS, DEBRIS, STICKS, STONES AND OTHER REFUSE SHALL BE REMOVED FROM THE SITE AND DISPOSED OF LEGALLY.
5. CONTRACTOR SHALL CONTACT STATE SPECIFIC ONE CALL SYSTEM THREE WORKING DAYS PRIOR TO ANY EARTH MOVING ACTIVITIES.
6. POWER TO THE FACILITY WILL BE MONITORED BY A SEPARATE METER.
7. THE PROPOSED FACILITY WILL CAUSE ONLY AN INSIGNIFICANT ("DE MINIMUS") INCREASE IN STORMWATER RUNOFF, THEREFORE, NO DRAINAGE STRUCTURES ARE PROPOSED.
8. SUBCONTRACTOR SHALL BE RESPONSIBLE FOR OBTAINING ALL PERMITS & INSPECTIONS REQUIRED FOR CONSTRUCTION.
9. SUBCONTRACTOR SHALL DETERMINE EXACT ROUTE OF ANY UNDERGROUND CONDUIT, IF REQUIRED.
10. ACCORDING TO THE FEMA FLOOD INSURANCE RATE MAP OF SUSSEX COUNTY, DE (AND INCORPORATED AREAS), MAP 10005C0300L, PANEL 300 OF 660, DATED 06/20/2018 ALL PROPOSED IMPROVEMENTS ARE LOCATED WITHIN ZONE X - AREAS DETERMINED TO BE OUTSIDE THE 0.2% ANNUAL CHANCE FLOODPLAIN.
11. TOTAL ACREAGE WITHIN STREETS/RIGHT-OF-WAY IS 0 ACRES.
12. THIS PROJECT WILL NOT REQUIRE STREETS OR PROPERTY TO BE DEDICATED FOR PUBLIC USE.
13. THIS PROJECT WILL NOT REQUIRE PERMANENT MONUMENTS.
14. THREE (3) EXISTING PERMANENT MONUMENTS WERE LOCATED ON THIS PROPERTY AND ZERO (0) WERE PLACED.
15. THE NEAREST INTERSECTION IS LOCATED AT THE CORNER OF RACE STREET AND PEPPER STREET, WHICH IS 150'± FROM THE EXISTING ACCESS DRIVEWAY.
16. HORIZONTAL DATUM: NAD83 DE STATE PLANE COORDINATE SYSTEM
    VERTICAL DATUM: NAVD88 ARE BASED ON KEYNET SOLUTION COORDINATES: U.S. SURVEY FEET
    BENCHMARK #1 N 253138.37 E 663656.38 ELEV.=50.42
    BENCHMARK #2 N 253199.19 E 663806.98 ELEV.=51.47
17. THE PROPOSED INSTALLATION WILL GENERATE ONE (1) VEHICLE TRIP FOR ROUTINE MAINTENANCE EVERY FOUR (4) TO SIX (6) WEEKS.

LEGEND:

- PROPERTY LINE
- RIGHT OF WAY LINE
- ADJACENT PROPERTY LINE
- SETBACK LINE
- PROPOSED FENCE
- EXISTING STRUCTURE
- EXISTING TREELINE
- OHW — EXISTING OVERHEAD WIRES
- E — PROPOSED UNDERGROUND ELECTRIC CONDUIT
- T — PROPOSED UNDERGROUND TELCO CONDUIT
- LIGHT LINEWEIGHT INDICATES EXISTING FACILITIES
- HEAVY LINEWEIGHT INDICATES PROPOSED FACILITIES
- T/E — PROPOSED UNDERGROUND UTILITIES

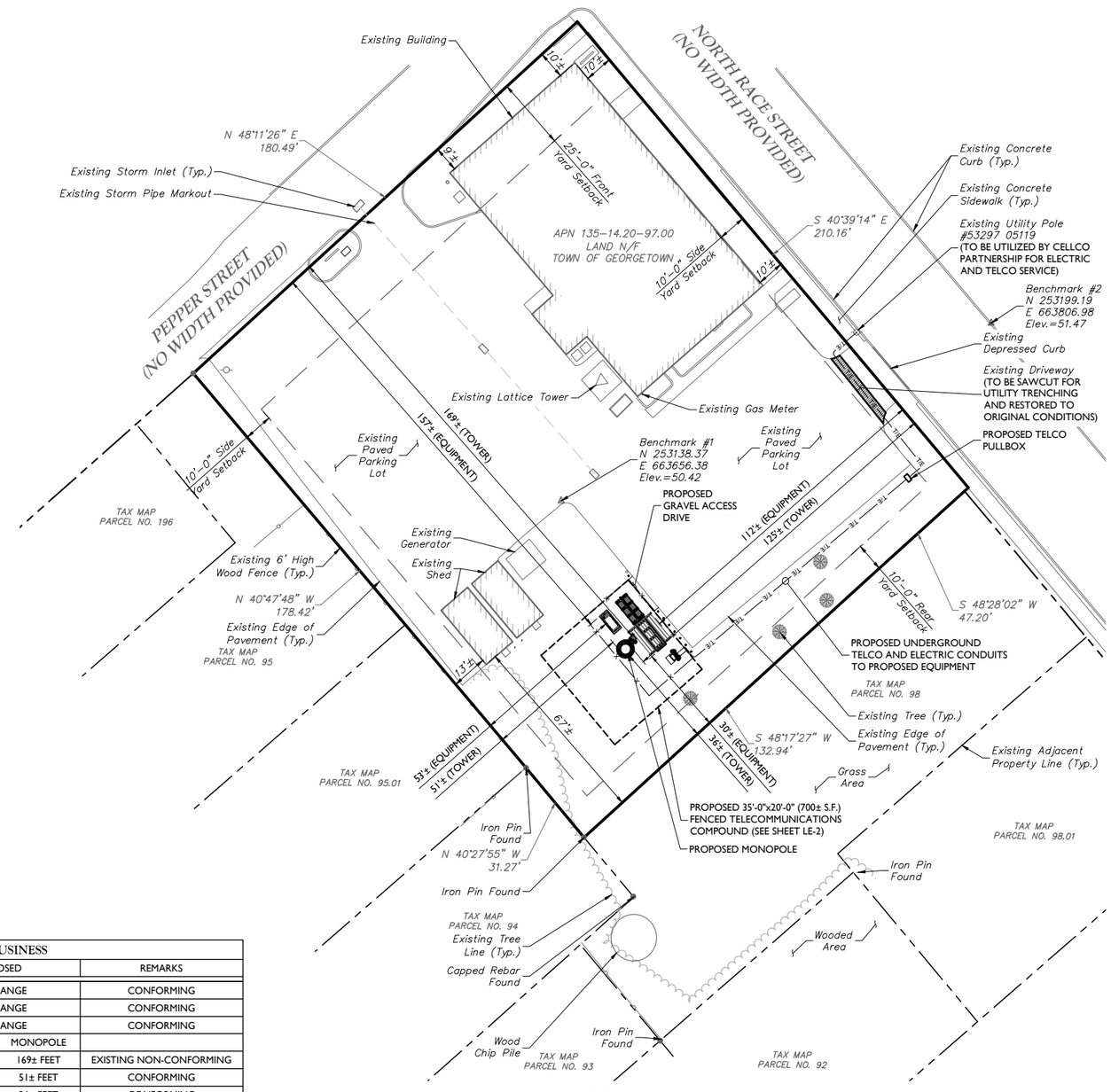

SITE PLAN

20 10 10 0 10 20 40

SCALE : 1" = 20' FOR 22"X34"
(SCALE : 1" = 40' FOR 11"X17")

BULK STANDARDS FOR UB-2 - NEIGHBORHOOD BUSINESS

DESCRIPTION	REQUIRED	EXISTING	PROPOSED		REMARKS
MINIMUM LOT AREA	7,200 S.F.	37,820± S.F.	NO CHANGE		CONFORMING
MINIMUM LOT WIDTH	60 FEET	180± FEET	NO CHANGE		CONFORMING
MINIMUM LOT DEPTH	120 FEET	210± FEET	NO CHANGE		CONFORMING
			EQUIPMENT	MONOPOLE	
MINIMUM FRONT YARD SETBACK	25 FEET	9± FEET	157± FEET	169± FEET	EXISTING NON-CONFORMING
MINIMUM SIDE YARD SETBACK	10 FEET	10± FEET	53± FEET	51± FEET	CONFORMING
MINIMUM REAR YARD SETBACK	10 FEET	67± FEET	30± FEET	36± FEET	CONFORMING
MAXIMUM BUILDING HEIGHT	24 FEET	<24 FEET	10± FEET		CONFORMING
MAXIMUM TOWER HEIGHT (§ 230-154)	150 FEET *	80.3± FEET	108± FEET **		CONFORMING

* SUBJECT TO PLANNING COMMISSION APPROVAL
** TOP OF LIGHTNING ROD

MASER CONSULTING P.A.
Customer Loyalty through Client Satisfaction
www.maserconsulting.com
Engineers ■ Planners ■ Surveyors
Landscape Architects ■ Environmental Scientists
Office Locations:
■ Red Bank, NJ ■ Clinton, NJ ■ Hamilton, NJ ■ Marmora, NJ ■ Mt. Arlington, NJ ■ Mt. Laurel, NJ
■ Sterling, VA ■ Norfolk, VA ■ Albuquerque, NM ■ Albany, NY ■ Chestnut Ridge, NY ■ Newburgh, NY
■ Hawthorne, NY ■ Lehigh Valley, PA ■ Exton, PA ■ Philadelphia, PA ■ Columbia, MD ■ Tampa, FL
State of D.E. Certificate of Authorization: 2840

Copyright © 2018 Maser Consulting P.A. All Rights Reserved. This drawing and all the information contained herein is authorized for use only by the party for whom the services were contracted or to whom it is certified. This drawing may not be copied, reused, disclosed, distributed or relied upon for any other purpose without the express written consent of Maser Consulting P.A.

verizon

CELLCO PARTNERSHIP d/b/a
VERIZON WIRELESS
512 TOWNSHIP LINE ROAD
BUILDING 2, FLOOR 3
BLUE BELL, PA 19422

811 Know what's below. Call before you dig.
PROTECT YOURSELF
ALL STATES REQUIRE NOTIFICATION OF EXCAVATORS, OWNERS OR ANY PERSON PREPARING TO DISTURB THE EARTH'S SURFACE ANYWHERE IN ANY STATE
FOR STATE SPECIFIC DIRECT PHONE NUMBERS VISIT: WWW.CALL811.COM

SCALE: AS SHOWN
JOB NUMBER: 18960085A

REV	DATE	DESCRIPTION	BY	CHK'D	CHECKED BY
0	11/02/18	ISSUED FOR REVIEW	MEG	MPC	
A	11/01/18	ISSUED FOR REVIEW	MEG	MEG	

STATE OF DELAWARE
MICHAEL P. CLEARY
No. 19205
DELAWARE PROFESSIONAL ENGINEER
PROFESSIONAL ENGINEER

IT IS A VIOLATION OF LAW FOR ANY PERSONS, UNLESS THEY ARE ACTING UNDER THE DIRECTION OF THE RESPONSIBLE LICENSED PROFESSIONAL ENGINEER, TO ALTER THIS DOCUMENT.

SITE NAME:

DOV GEORGETOWN CIRCLE
335 N. RACE STREET
GEORGETOWN, DE 19947
SUSSEX COUNTY

MT. LAUREL OFFICE
2000 Midlantic Drive
Suite 100
Mt. Laurel NJ 08054
Phone: .856.797.0412
Fax: .856.722.1120
email: solutions@maserconsulting.com

SHEET TITLE: SITE PLAN

SHEET NUMBER: Z-2

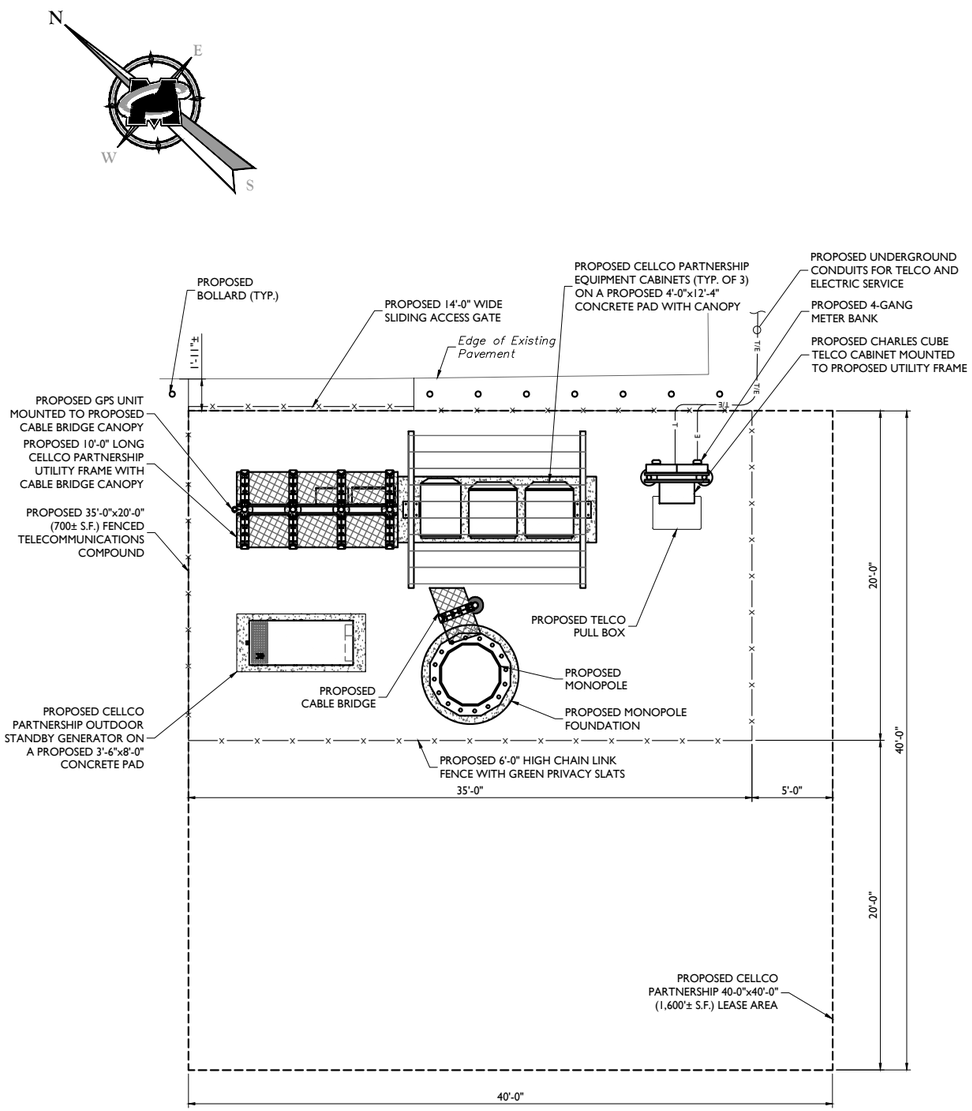

COMPOUND PLAN

4 0 4 8

SCALE : 1" = 4' FOR 22"X34"
(SCALE : 1" = 8' FOR 11"X17")

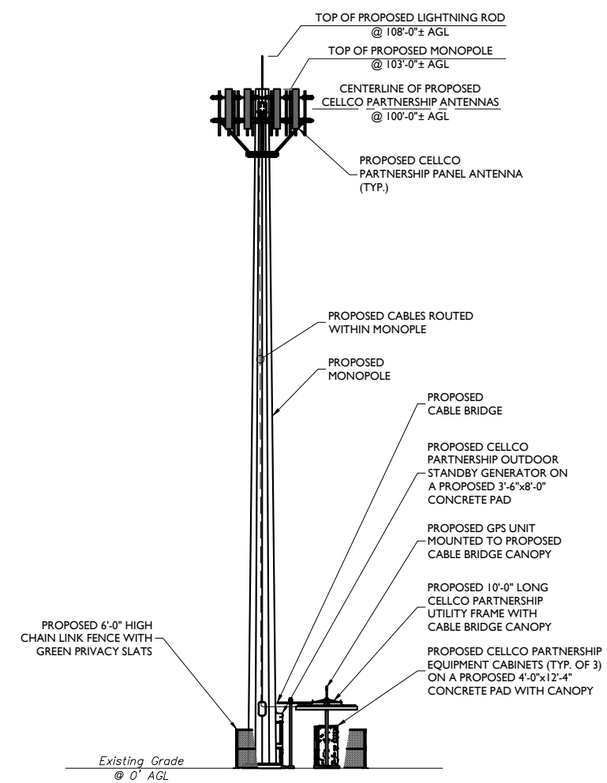

ELEVATION VIEW

10 0 10 20

SCALE : 1" = 10' FOR 22"X34"
(SCALE : 1" = 20' FOR 11"X17")

LEGEND:

—X—X—X—	PROPOSED FENCE
—E—E—	PROPOSED UNDERGROUND ELECTRIC CONDUIT
—T—T—	PROPOSED UNDERGROUND TELCO CONDUIT
	LIGHT LINEWEIGHT INDICATES EXISTING FACILITIES
	HEAVY LINEWEIGHT INDICATES PROPOSED FACILITIES
—T/E—T/E—	PROPOSED UNDERGROUND UTILITIES

640-DV Georgetown Circle.ZD Rev 0.dwg(Z-3 By: MGP,ALB,RAT

MASER CONSULTING P.A.
Customer Loyalty through Client Satisfaction
www.maserconsulting.com
Engineers ■ Planners ■ Surveyors
Landscape Architects ■ Environmental Scientists
Office Locations:
■ Red Bank, NJ ■ Clinton, NJ ■ Hamilton, NJ ■ Marmora, NJ ■ Mt. Arlington, NJ ■ Mt. Laurel, NJ
■ Sterling, VA ■ Norfolk, VA ■ Albuquerque, NM ■ Albany, NY ■ Chestnut Ridge, NY ■ Newburgh, NY
■ Hawthorne, NY ■ Lehigh Valley, PA ■ Exton, PA ■ Philadelphia, PA ■ Columbia, MD ■ Tampa, FL
State of D.E. Certificate of Authorization: 2840

Copyright © 2018 Maser Consulting P.A. All Rights Reserved. This drawing and all the information contained herein is authorized for use only by the party for whom the services were contracted or to whom it is certified. This drawing may not be copied, reused, disclosed, distributed or relied upon for any other purpose without the express written consent of Maser Consulting P.A.

verizon

CELLCO PARTNERSHIP d/b/a
VERIZON WIRELESS
512 TOWNSHIP LINE ROAD
BUILDING 2, FLOOR 3
BLUE BELL, PA 19422

811 Know what's below. Call before you dig.
PROTECT YOURSELF
ALL STATES REQUIRE NOTIFICATION OF EXCAVATORS BEFORE ANY OR ANY PERSON PREPARING TO DISTURB THE EARTH'S SURFACE ANYWHERE IN ANY STATE
FOR STATE SPECIFIC DIRECT PHONE NUMBERS VISIT: WWW.CALL811.COM

SCALE : AS SHOWN
JOB NUMBER : 18960085A

REV	DATE	DESCRIPTION	DRAWN BY	CHECKED BY
0	11/02/18	ISSUED FOR REVIEW	MEG	MPC
A	11/01/18	ISSUED FOR REVIEW	MEG	MEG

MICHAEL P. CLEARY LICENSE No. 19205 DELAWARE PROFESSIONAL ENGINEER

IT IS A VIOLATION OF LAW FOR ANY PERSONS, UNLESS THEY ARE ACTING UNDER THE DIRECTION OF THE RESPONSIBLE LICENSED PROFESSIONAL ENGINEER, TO ALTER THIS DOCUMENT.

SITE NAME:
DOV GEORGETOWN CIRCLE
335 N. RACE STREET
GEORGETOWN, DE 19947
SUSSEX COUNTY

MT. LAUREL OFFICE
2000 Midlantic Drive
Suite 100
Mt. Laurel NJ 08054
Phone: 856.797.0412
Fax: 856.722.1120
email: solutions@maserconsulting.com

SHEET TITLE : COMPOUND PLAN AND ELEVATION VIEW

SHEET NUMBER : Z-3

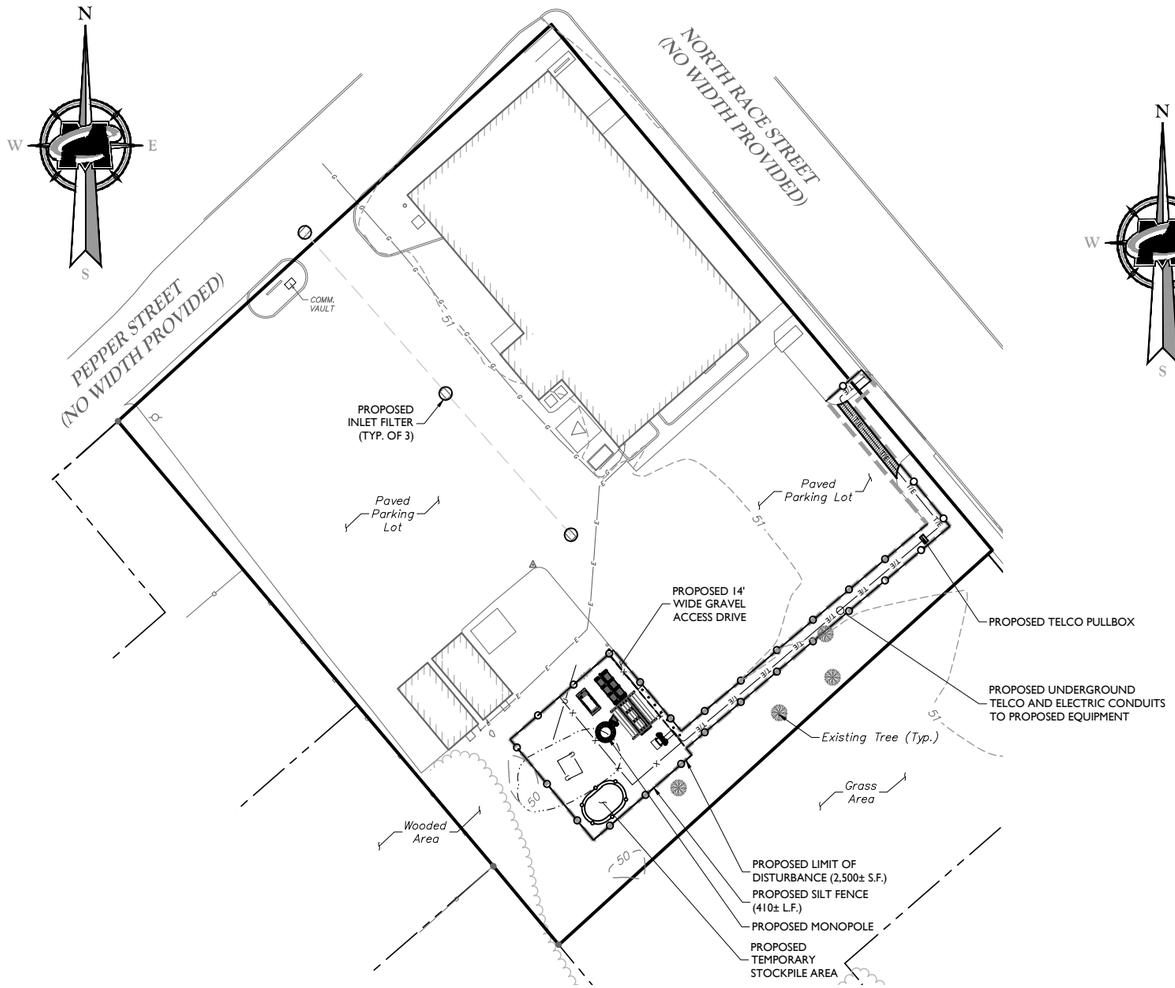

SOIL EROSION AND SEDIMENT CONTROL PLAN

20 16 12 8 4 0 10 20 40

SCALE : 1" = 20' FOR 22"X34"
(SCALE : 1" = 40' FOR 11"X17")

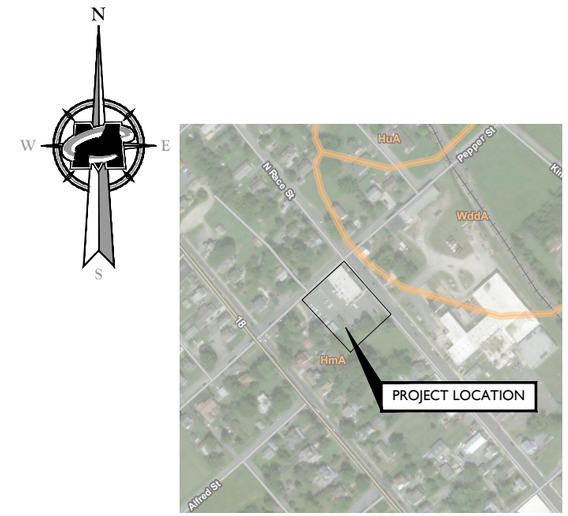

SOILS MAP

100 50 40 30 0 50 100 200

SCALE : 1" = 100' FOR 22"X34"
(SCALE : 1" = 200' FOR 11"X17")

Map Unit Symbol	Map Unit Name	Acres in AOI	Percent of AOI
HmA	Hammonton loamy sand, 0 to 2 percent slopes	28.3	74.2%
HuA	Hurlock loamy sand, 0 to 2 percent slopes	1.3	3.5%
WddA	Woodstown sandy loam, 0 to 2 percent slopes, Northern Tidewater Area	8.5	22.3%
Totals for Area of Interest		**38.1**	**100.0%**

LEGEND:

- LIMIT OF DISTURBANCE
- PROPOSED SILT FENCE
- PROPOSED FENCE LINE
- 140 MAJOR CONTOUR
- 139 MINOR CONTOUR

By: MGALBART

04-DOV Georgetown Circle.ZB.Rev 5.dwg Z-4

MASER CONSULTING P.A.
Customer Loyalty through Client Satisfaction
www.maserconsulting.com
Engineers ■ Planners ■ Surveyors
Landscape Architects ■ Environmental Scientists
Office Locations:
■ Red Bank, NJ ■ Clinton, NJ ■ Hamilton, NJ ■ Marmora, NJ ■ Mt. Arlington, NJ ■ Mt. Laurel, NJ
■ Sterling, VA ■ Norfolk, VA ■ Albuquerque, NM ■ Albany, NY ■ Chestnut Ridge, NY ■ Newburgh, NY
■ Hawthorne, NY ■ Lehigh Valley, PA ■ Exton, PA ■ Philadelphia, PA ■ Columbia, MD ■ Tampa, FL
State of D.E. Certificate of Authorization: 2840

Copyright © 2018 Maser Consulting P.A. All Rights Reserved. This drawing and all the information contained herein is authorized for use only by the party for whom the services were contracted or to whom it is certified. This drawing may not be copied, reused, disclosed, distributed or relied upon for any other purpose without the express written consent of Maser Consulting P.A.

verizon

CELLCO PARTNERSHIP d/b/a
VERIZON WIRELESS
512 TOWNSHIP LINE ROAD
BUILDING 2, FLOOR 3
BLUE BELL, PA 19422

811 Know what's below. Call before you dig.

PROTECT YOURSELF
ALL STATES REQUIRE NOTIFICATION OF EXCAVATORS BEFORE ANY OR ANY PERSON PREPARING TO DISTURB THE EARTH'S SURFACE ANYWHERE IN ANY STATE

FOR STATE SPECIFIC DIRECT PHONE NUMBERS VISIT:
WWW.CALL811.COM

SCALE :	JOB NUMBER :
AS SHOWN	18960085A

REV	DATE	DESCRIPTION	DRAWN BY	CHECKED BY
0	11/02/18	ISSUED FOR REVIEW	MEG	MPC
A	11/01/18	ISSUED FOR REVIEW		MEG

MICHAEL P. CLEARY
LICENSE
No. 19205
MICHAEL P. CLEARY
DELAWARE PROFESSIONAL ENGINEER - LICENSE NUMBER: 19205
DELAWARE
PROFESSIONAL ENGINEER

IT IS A VIOLATION OF LAW FOR ANY PERSON, UNLESS THEY ARE ACTING UNDER THE DIRECTION OF THE RESPONSIBLE LICENSED PROFESSIONAL ENGINEER, TO ALTER THIS DOCUMENT.

SITE NAME:

DOV GEORGETOWN CIRCLE
335 N. RACE STREET
GEORGETOWN, DE 19947
SUSSEX COUNTY

MT. LAUREL OFFICE
2000 Midlantic Drive
Suite 100
Mt. Laurel NJ 08054
Phone: 856.797.0412
Fax: 856.722.1120
email: solutions@maserconsulting.com

SHEET TITLE :
SOIL EROSION AND SEDIMENT CONTROL PLAN

SHEET NUMBER :
Z-4

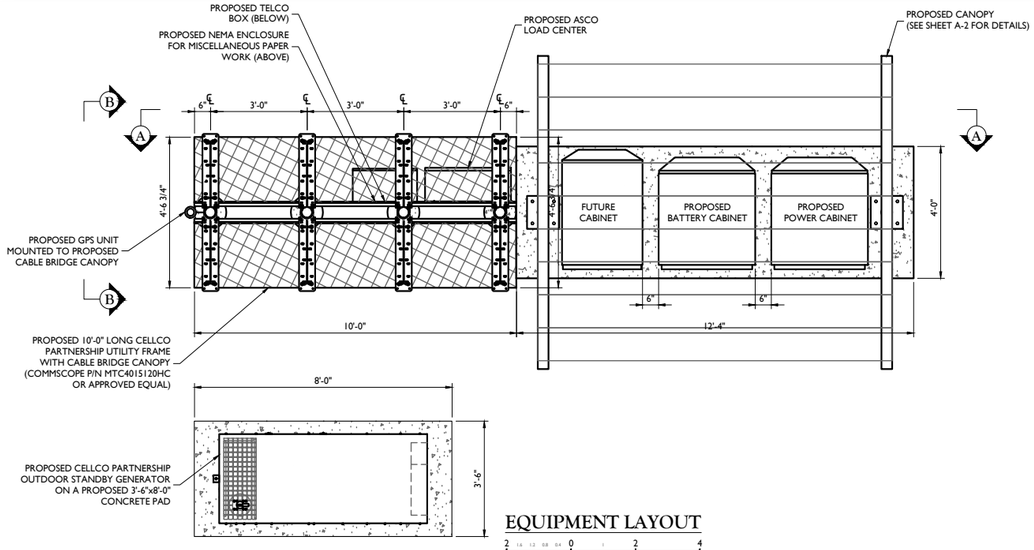

EQUIPMENT LAYOUT

SCALE : 1" = 2' FOR 22"X34"
(SCALE : 1" = 4' FOR 11"X17")

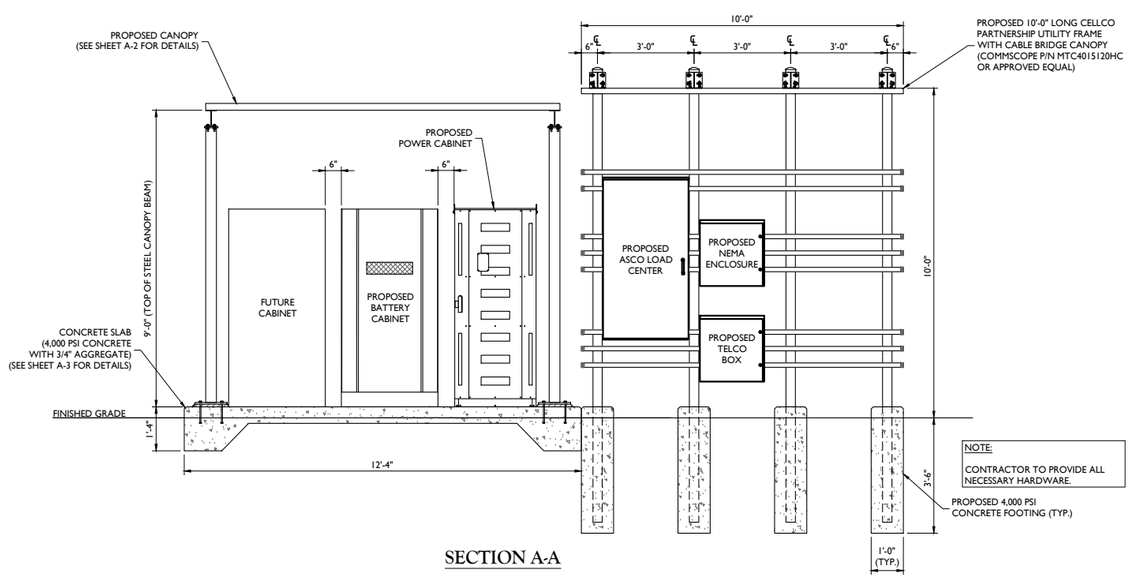

SECTION A-A

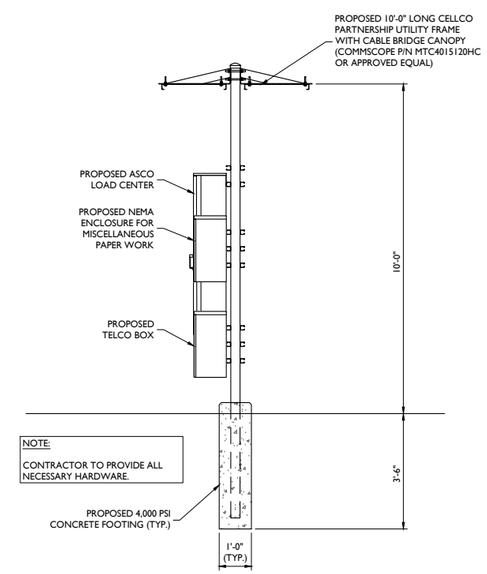

SECTION B-B

EQUIPMENT SECTION VIEWS

SCALE : 1" = 2' FOR 22"X34"
(SCALE : 1" = 4' FOR 11"X17")

MASER CONSULTING P.A.
Customer Loyalty through Client Satisfaction
www.maserconsulting.com
Engineers ■ Planners ■ Surveyors
Landscape Architects ■ Environmental Scientists
Office Locations:
■ Red Bank, NJ ■ Clinton, NJ ■ Hamilton, NJ ■ Marmora, NJ ■ Mt. Arlington, NJ ■ Mt. Laurel, NJ
■ Sterling, VA ■ Norfolk, VA ■ Albuquerque, NM ■ Albany, NY ■ Chestnut Ridge, NY ■ Newburgh, NY
■ Hawthorne, NY ■ Lehigh Valley, PA ■ Exton, PA ■ Philadelphia, PA ■ Columbia, MD ■ Tampa, FL
State of D.E. Certificate of Authorization: 2840

Copyright © 2018 Maser Consulting P.A. All Rights Reserved. This drawing and all the information contained herein is authorized for use only by the party for whom the services were contracted or to whom it is certified. This drawing may not be copied, reused, disclosed, distributed or relied upon for any other purpose without the express written consent of Maser Consulting P.A.

verizon

CELLCO PARTNERSHIP d/b/a
VERIZON WIRELESS
512 TOWNSHIP LINE ROAD
BUILDING 2, FLOOR 3
BLUE BELL, PA 19422

811 Know what's below. Call before you dig.
PROTECT YOURSELF
ALL STATES REQUIRE NOTIFICATION OF EXCAVATORS BEFORE ANY OR ANY PERSON PREPARING TO DISTURB THE EARTH'S SURFACE ANYWHERE IN ANY STATE
FOR STATE SPECIFIC DIRECT PHONE NUMBERS VISIT: WWW.CALL811.COM

SCALE : AS SHOWN
JOB NUMBER : 18960085A

REV	DATE	DESCRIPTION	DRAWN BY	CHECKED BY
0	11/02/18	ISSUED FOR REVIEW	MEG	MPC
A	11/01/18	ISSUED FOR REVIEW	MEG	MEG

MICHAEL P. CLEARY LICENSE No. 19205 DELAWARE PROFESSIONAL ENGINEER

IT IS A VIOLATION OF LAW FOR ANY PERSONS, UNLESS THEY ARE ACTING UNDER THE DIRECTION OF THE RESPONSIBLE LICENSED PROFESSIONAL ENGINEER, TO ALTER THIS DOCUMENT.

SITE NAME:
DOV GEORGETOWN CIRCLE
335 N. RACE STREET
GEORGETOWN, DE 19947
SUSSEX COUNTY

MT. LAUREL OFFICE
2000 Midlantic Drive
Suite 100
Mt. Laurel NJ 08054
Phone: 856.797.0412
Fax: 856.722.1120
email: solutions@maserconsulting.com

SHEET TITLE : CONSTRUCTION DETAILS

SHEET NUMBER : A-1

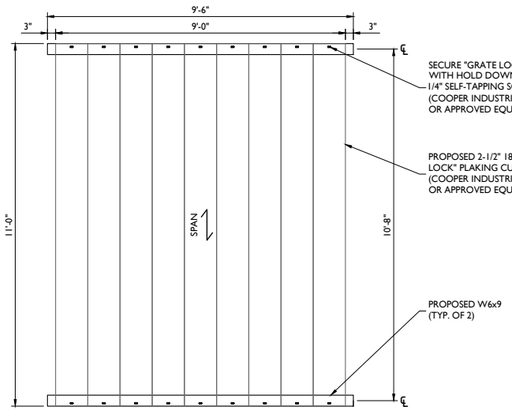

CANOPY PLAN

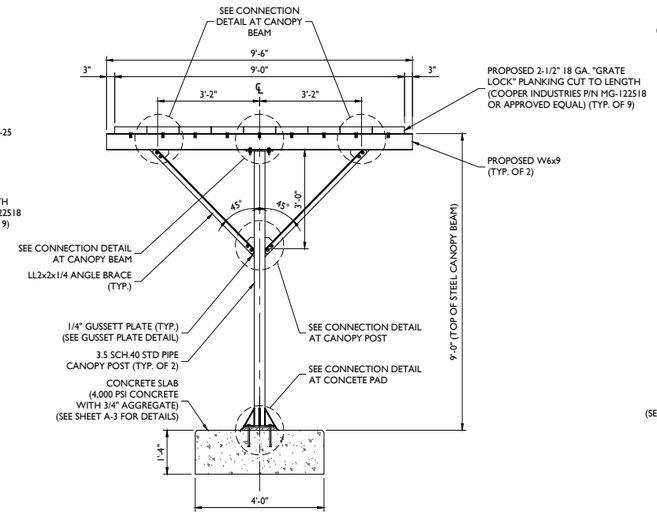

SIDE ELEVATION

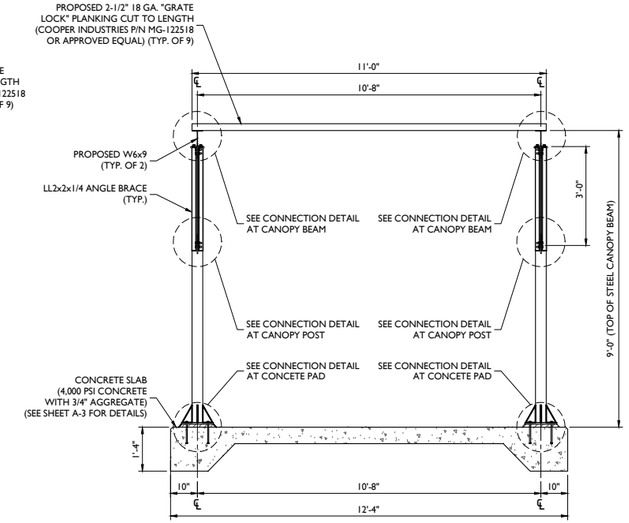

FRONT/REAR ELEVATION

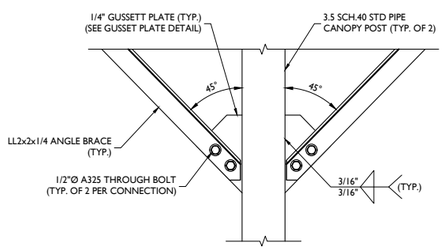

CONNECTION DETAIL AT CANOPY POST

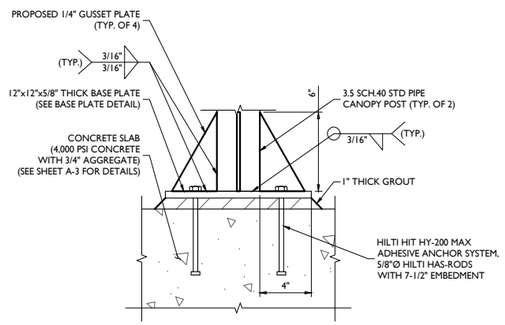

CONNECTION DETAIL AT CONCRETE PAD

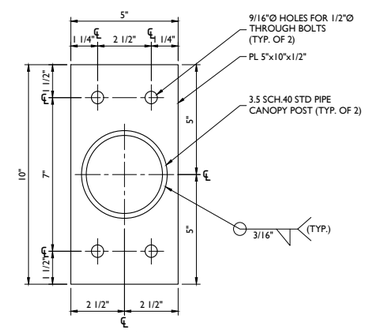

CANOPY POST CAP PLATE DETAIL

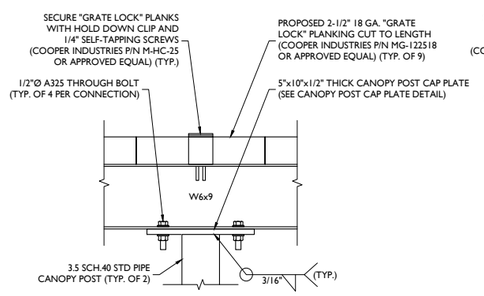

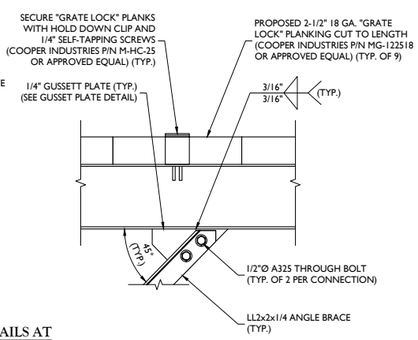

CONNECTION DETAILS AT CANOPY BEAM

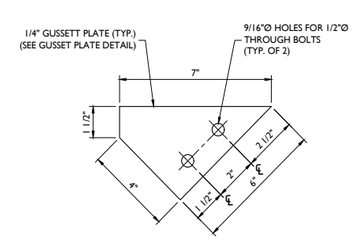

GUSSET PLATE DETAIL

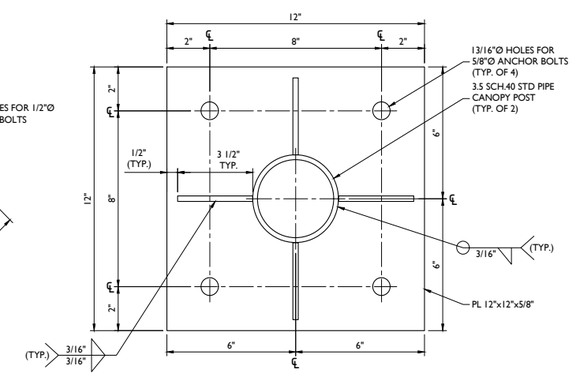

BASE PLATE DETAIL

MASER CONSULTING P.A.
Customer Loyalty through Client Satisfaction
www.maserconsulting.com
Engineers ■ Planners ■ Surveyors
Landscape Architects ■ Environmental Scientists
Office Locations:
■ Red Bank, NJ ■ Sterling, VA ■ Hawthorne, NY
■ Clinton, NJ ■ Norfolk, VA ■ Lehigh Valley, PA
■ Hamilton, NJ ■ Albuquerque, NM ■ Exton, PA
■ Marmora, NJ ■ Albany, NY ■ Philadelphia, PA
■ Mt. Arlington, NJ ■ Chestnut Ridge, NY ■ Columbia, MD
■ Mt. Laurel, NJ ■ Newburgh, NY ■ Tampa, FL
State of D.E. Certificate of Authorization: 2840

Copyright © 2018 Maser Consulting P.A. All Rights Reserved. This drawing and all the information contained herein is authorized for use only by the party for whom the services were contracted or to whom it is certified. This drawing may not be copied, reused, disclosed, distributed or relied upon for any other purpose without the express written consent of Maser Consulting P.A.

verizon

CELLCO PARTNERSHIP d/b/a
VERIZON WIRELESS
512 TOWNSHIP LINE ROAD
BUILDING 2, FLOOR 3
BLUE BELL, PA 19422

811 Know what's below. Call before you dig.

PROTECT YOURSELF
ALL STATES REQUIRE NOTIFICATION OF EXCAVATORS, DIGGERS OR ANY PERSON PREPARING TO DISTURB THE EARTH'S SURFACE ANYWHERE IN ANY STATE

FOR STATE SPECIFIC DIRECT PHONE NUMBERS VISIT:
WWW.CALL811.COM

SCALE :	JOB NUMBER :
AS SHOWN	18960085A

REV	DATE	DESCRIPTION	DRAWN BY	CHECKED BY
0	11/02/18	ISSUED FOR REVIEW	MEG	MPC
A	11/01/18	ISSUED FOR REVIEW	MEG	MEG

MICHAEL P. CLEARY
LICENSE
No. 19205
MICHAEL P. CLEARY
DELAWARE PROFESSIONAL ENGINEER - LICENSE NUMBER: 19205
DELAWARE
PROFESSIONAL ENGINEER

IT IS A VIOLATION OF LAW FOR ANY PERSONS, UNLESS THEY ARE ACTING UNDER THE DIRECTION OF THE RESPONSIBLE LICENSED PROFESSIONAL ENGINEER, TO ALTER THIS DOCUMENT.

SITE NAME:

DOV GEORGETOWN CIRCLE
335 N. RACE STREET
GEORGETOWN, DE 19947
SUSSEX COUNTY

MT. LAUREL OFFICE
2000 Midlantic Drive
Suite 100
Mt. Laurel NJ 08054
Phone: 856.797.0412
Fax: 856.722.1120
email: solutions@maserconsulting.com

SHEET TITLE :
CONSTRUCTION DETAILS

SHEET NUMBER :
A-2

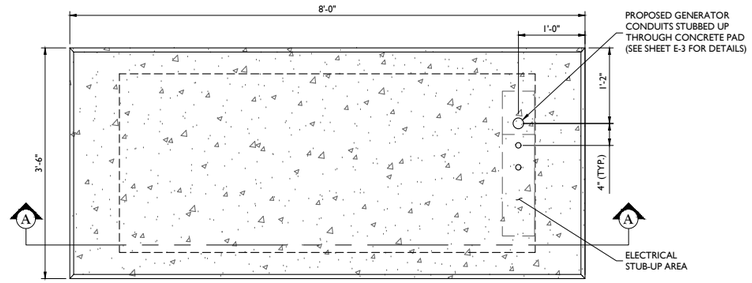

PLAN VIEW

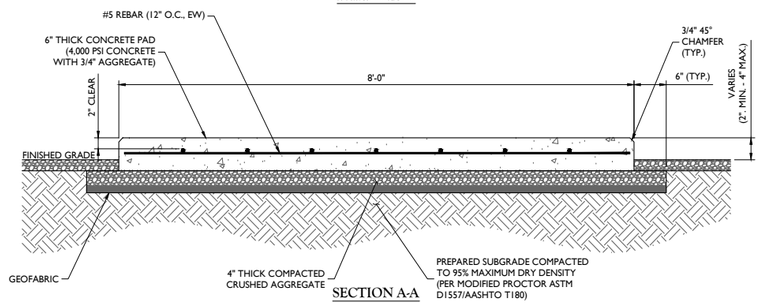

SECTION A-A

GENERATOR CONCRETE PAD DETAIL

NOT TO SCALE

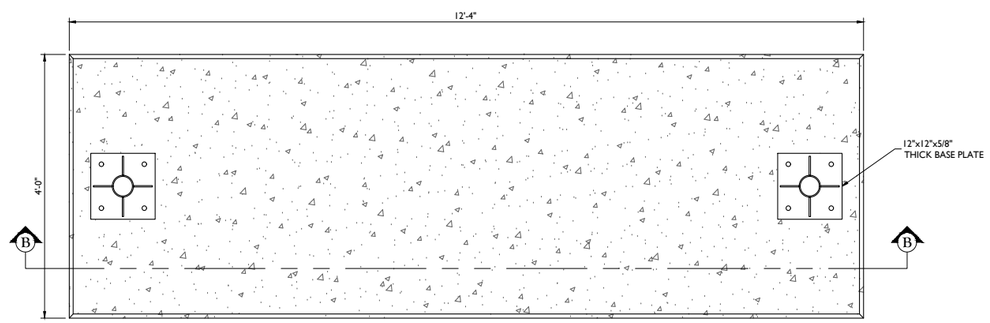

PLAN VIEW

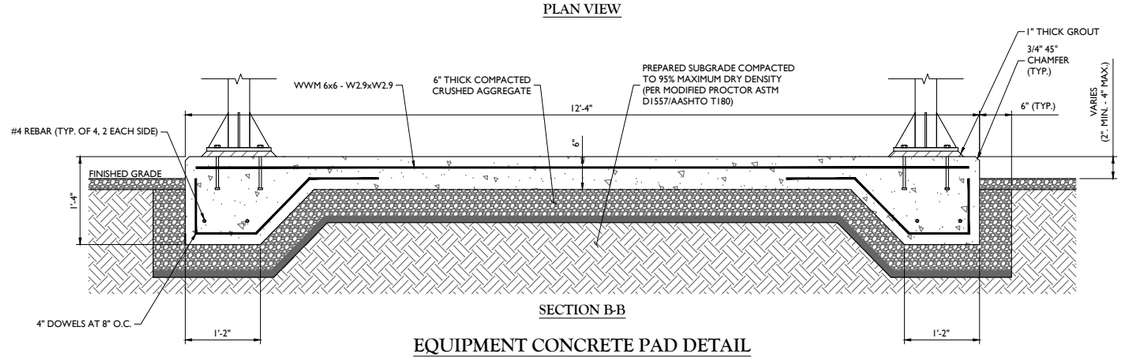

SECTION B-B

EQUIPMENT CONCRETE PAD DETAIL

NOT TO SCALE

CONCRETE NOTES:

DESIGN INFORMATION:

1. ALL CONCRETE WORK SHALL BE IN ACCORDANCE WITH THE ACI 301, ACI 318, ACI 336A, ASTM A184, ASTM A185 AND THE DESIGN & CONSTRUCTION SPECIFICATION FOR CAST-IN-PLACE CONCRETE.

2. THE DESIGN SHALL CONFORM TO THE INTERNATIONAL BUILDING CODE AS SHOWN ON SHEET T-1.

EARTHWORK:

1. FOUNDATIONS HAVE BEEN DESIGNED TO BEAR ON (UNDISTURBED RESIDUAL SOILS/COMPACTED STRUCTURAL FILL), CAPABLE OF SAFELY SUPPORTING AN ALLOWABLE BEARING PRESSURE OF 1,500 PSF. IF FOUNDATION CONDITIONS PROVE UNACCEPTABLE AT ELEVATIONS SHOWN, EXCAVATION SHALL BE CARRIED DEEPER AND SHALL BE BACKFILLED WITH LEAN CONCRETE TO PLAN FOOTING BOTTOM, OR REDISIGN OF FOUNDATIONS WILL BE REQUIRED AT THE DIRECTION OF THE ENGINEER.

2. DESIGN FURNISH AND INSTALL TEMPORARY SHEETING, SHORING, AND DRAINAGE TO MAINTAIN THE EXCAVATION AND PROTECT SURROUNDING STRUCTURES AND UTILITIES.

3. THOROUGHLY COMPACT ALL BOTTOM OF FOOTINGS PRIOR TO PLACING ANY CONCRETE.

CONCRETE:

1. FORMWORK

   1.a. CONCRETE CONSTRUCTION SHALL CONFORM TO "SPECIFICATIONS FOR STRUCTURAL CONCRETE FOR BUILDINGS." (ACI 301-89).

   1.b. FORMWORK SHALL CONFORM TO ACI 301 "SPECIFICATIONS FOR STRUCTURAL CONCRETE FOR BUILDINGS"

2. REINFORCEMENT

   2.a. REINFORCING STEEL ASTM A615, GRADE 60. WELDED WIRE ASTM A185 (FLAT SHEET). LAPS 40 BAR DIAMETERS UNLESS NOTED. BARS SHALL BE SECURELY HELD IN ACCURATE POSITION BY SUITABLE ACCESSORIES, TIE BARS, SUPPORT BARS, ETC. HOOK LENGTHS SHALL BE 12 BAR DIAMETERS.

   2.b. CONCRETE COVER FOR REINFORCING BARS SHALL BE AS FOLLOWS, UNLESS OTHERWISE NOTED.

2.b.1.	FOOTINGS AND SLABS CAST AGAINST GROUND	3"
2.b.2.	CONCRETE TO BE IN CONTACT WITH GROUND OR WEATHER AT BARS GREATER THAN 5"	2"
2.b.3.	AT BARS #5 OR LESS	1 1/2"
2.b.4.	CONCRETE NOT TO BE EXPOSED TO GROUND OR WEATHER BEAMS, GIRDERS, AND COLUMNS	1 1/2"
2.b.5.	SLABS AND WALLS	3/4"

   2.c. CAST IN PLACE CONCRETE

   2.c.1. MINIMUM 28 DAY CYLINDER STRENGTH AND MAXIMUM SLUMP, PRIOR TO ADDITION F SUPER PLASTICIZERS, AS FOLLOWS:

2.c.1.1.	CLASS I FOOTINGS	3000	PSI	3"
2.c.1.2.	CLASS III INTERIOR ELEVATED SLABS AND WALLS	4000	PSI	4"
2.c.1.3.	CLASS V OTHER WORK	4000	PSI	4"
2.c.1.4.	CLASS VI LEAN CONCRETE FOR OVEREXCAVATION OF FOUNDATIONS	2000	PSI	N/A

   2.c.2. MIX DESIGN TO BE IN ACCORDANCE WITH ACI 318, CHAPTER 5. NO CALCIUM CHLORIDE ADMIXTURE CONTAINING CHLORIDES SHALL BE USED IN ANY CONCRETE

   2.c.3. COARSE AGGREGATE FOR NORMAL WIEGHT CONCRETE SHALL CONFORM TO ASTM C33 SIZE #57. COARSE AGGREGATE FOR LIGHTWEIGHT CONCRETE SHALL CONFORM TO ASTM C330 GRADED 3/4" TO 1/4".

   2.c.4. COLD WEATHER PLACEMENT SHALL COMPLY WITH ACI 306.1

   2.c.5. HOT WEATHER PLACEMENT SHALL COMPLY WITH ACI 305 R.

   2.c.6. CHAMFER ALL EXPOSED EDGES 3/4"

   2.c.7. THE MAXIMUM TEMPERATURE OF ALL CONCRETE AT DELIVERY TO THE SITE SHALL BE 85°F

   2.c.8. TOTAL DELIVERY TIME SHALL BE LESS THAN 75 MINUTES.

ANCHOR NOTES:

1. CONTRACTOR SHALL VERIFY CONSTRUCTION AND CONDITION OF EXISTING STRUCTURE PRIOR TO INSTALLATION OF ANCHORS. IF ANCHORS ARE UNABLE TO BE INSTALLED AS SHOWN OR DESCRIBED BELOW, OR THE EXISTING STRUCTURE IS CRACKED, DETERIORATED OR MISSING BASE MATERIAL SECTIONS, THE CONTRACTOR SHALL CONTACT THE ENGINEER IMMEDIATELY.

2. ANCHORS SHALL BE INSTALLED PER MANUFACTURE'S WRITTEN SPECIFICATIONS.

3. ANCHORS SHALL NOT BE INSTALLED WITHIN OR NEAR MORTAR AREAS. ANCHORS SHALL BE INSTALLED IN THE CENTER OF BRICK.

4. THROUGH BOLTING, IF POSSIBLE, SHALL BE UTILIZED AS THE PRIMARY ANCHORING METHOD:
   - 5/8"Ø A36/A307 THREADED ROD W/ NUTS AND OVERSIZED WASHERS

5. ADHESIVE ANCHORS/FASTENERS REQUIREMENTS:
   - CONCRETE
     - (MINIMUM CONCRETE THICKNESS = 7 3/8"):
       - HILTI HY200 WITH 5/8"Ø HIT-Z(-R) RODS AND OVERSIZED WASHER
   - MASONRY
     - GROUT FILLED CMU:
       - 5/8" Ø THREADED ROD WITH HILTI HIT-HY 70 ADHESIVE
       - 5-5/8"" EFFECTIVE EMBEDMENT
       - 4" MINIMUM SPACING BETWEEN ANCHORS
       - 4" MINIMUM EDGE DISTANCE
     - HOLLOW CMU:
       - HIT-IC 1/2X2 INSERT WITH HIT-HY 70 ADHESIVE AND OVERSIZED WASHER
       - 2" EFFECTIVE EMBEDMENT
       - 4" MINIMUM SPACING BETWEEN ANCHORS, MAXIMUM TWO (2) ANCHORS PER HOLLOW CELL
       - 4" MINIMUM EDGE DISTANCE
     - HOLLOW BRICK:
       - HIT-IC 1/2X3-3/16 INSERT WITH HIT-HY 70 ADHESIVE AND OVERSIZED WASHER
       - 3-1/8" EFFECTIVE EMBEDMENT
       - 8" MINIMUM SPACING BETWEEN ANCHORS, MAXIMUM ONE (1) ANCHOR PER BRICK
       - 8" MINIMUM EDGE DISTANCE
     - MULTI-WYTHE SOLID BRICK (MINIMUM 13" THICK WALL OR REPRESENTING 3 WYTHES OF BRICK):
       - 5/8"Ø THREADED ROD WITH HILTI HIT-HY 70 WITH OVERSIZED WASHER
       - 6" MINIMUM EMBEDMENT
       - 16" MINIMUM SPACING BETWEEN ANCHORS, MAXIMUM ONE (1) ANCHOR PER BRICK
       - 16" MINIMUM EDGE DISTANCE

MASER CONSULTING P.A.
Customer Loyalty through Client Satisfaction
www.maserconsulting.com
Engineers ■ Planners ■ Surveyors
Landscape Architects ■ Environmental Scientists
Office Locations:
■ Red Bank, NJ ■ Clinton, NJ ■ Hamilton, NJ ■ Marmora, NJ ■ Mt. Arlington, NJ ■ Mt. Laurel, NJ
■ Sterling, VA ■ Norfolk, VA ■ Albuquerque, NM ■ Albany, NY ■ Chestnut Ridge, NY ■ Newburgh, NY
■ Hawthorne, NY ■ Lehigh Valley, PA ■ Exton, PA ■ Philadelphia, PA ■ Columbia, MD ■ Tampa, FL
State of D.E. Certificate of Authorization: 2840

Copyright © 2018 Maser Consulting P.A. All Rights Reserved. This drawing and all the information contained herein is authorized for use only by the party for whom the services were contracted or to whom it is certified. This drawing may not be copied, reused, disclosed, distributed or relied upon for any other purpose without the express written consent of Maser Consulting P.A.

verizon

CELLCO PARTNERSHIP d/b/a
VERIZON WIRELESS
512 TOWNSHIP LINE ROAD
BUILDING 2, FLOOR 3
BLUE BELL, PA 19422

811 Know what's below. Call before you dig.

PROTECT YOURSELF
ALL STATES REQUIRE NOTIFICATION OF EXCAVATORS, DIGGERS OR ANY PERSON PREPARING TO DISTURB THE EARTH'S SURFACE ANYWHERE IN ANY STATE

FOR STATE SPECIFIC DIRECT PHONE NUMBERS VISIT: WWW.CALL811.COM

SCALE :	JOB NUMBER :
AS SHOWN	18960085A

REV	DATE	DESCRIPTION	DRAWN BY	CHECKED BY
0	11/02/18	ISSUED FOR REVIEW	MEG	MPC
A	11/01/18	ISSUED FOR REVIEW	MEG	MEG

MICHAEL P. CLEARY LICENSE No. 19205 MICHAEL P. CLEARY DELAWARE PROFESSIONAL ENGINEER - LICENSE NUMBER: 19205 DELAWARE PROFESSIONAL ENGINEER

IT IS A VIOLATION OF LAW FOR ANY PERSON, UNLESS THEY ARE ACTING UNDER THE DIRECTION OF THE RESPONSIBLE LICENSED PROFESSIONAL ENGINEER, TO ALTER THIS DOCUMENT.

SITE NAME:

DOV GEORGETOWN CIRCLE
335 N. RACE STREET
GEORGETOWN, DE 19947
SUSSEX COUNTY

MT. LAUREL OFFICE
2000 Midlantic Drive
Suite 100
Mt. Laurel NJ 08054
Phone: 856.797.0412
Fax: 856.722.1120
email: solutions@maserconsulting.com

SHEET TITLE :
CONSTRUCTION DETAILS

SHEET NUMBER :
A-3

04-DOV-Georgetown Circle_ZD-Rev 0.dwg-A-3 By: MGRAUBART

NOTES:

1. THE RIGHT SIDE OF THE GENERATOR IS SERVICE ACCESSIBLE.
2. 6 AMP BATTERY CHARGER.
3. 120VAC ENGINE BLOCK HEATER.
4. GENERATOR MUST BE GROUNDED.
5. SOUND ATTENUATED ENCLOSURE STANDARD WITH GENERATOR.
6. MUST ALLOW FREE FLOW OF DISCHARGE AIR AND EXHAUST.
7. MUST ALLOW FREE FLOW OF AIR INTAKE.
8. EASY ACCESS SERVICE PANEL IS LOCATED ON THE RIGHT SIDE OF THE GENERATOR ONLY.
9. BASE TANK REQUIRES ALL STUB-UPS TO BE IN THE REAR TANK STUB-UP AREA.
10. SEE TABLE FOR SUB-BASE FUEL TANK CAPACITY.
11. TANK EQUIPPED WITH FIRE SAFETY VALVE ON FUEL SUPPLY LINE.
12. IT IS THE RESPONSIBILITY OF THE INSTALLATION TECHNICIAN TO ENSURE THAT THE GENERATOR INSTALLATION COMPLIES WITH ALL APPLICABLE CODES, STANDARDS AND REGULATIONS.
13. GENERATOR IS INSTALLED ON UL-142 RATE DOUBLE WALL SUB-BASE FUEL TANK.

GENSET	TANK P/N	TANK HEIGHT (A)	DESCRIPTION	ASSEMBLY WEIGHT
20REOZK	GM97093-MA1	32.0"	SKID/TANK, 148 GAL	1,823 LBS
20REOZK	GM97093-MA2	41.0"	SKID/TANK, 203 GAL	1,968 LBS
20REOZK	GM97093-MA3	15.0"	SKID/TANK, 53 GAL	1,557 LBS
20REOZK	GM97093-MA4	27.0"	SKID/TANK, 120 GAL	1,745 LBS
30REOZK	GM97093-MA1	32.0"	SKID/TANK, 148 GAL	1,969 LBS
30REOZK	GM97093-MA2	41.0"	SKID/TANK, 203 GAL	2,114 LBS
30REOZK	GM97093-MA3	15.0"	SKID/TANK, 53 GAL	1,703 LBS
30REOZK	GM97093-MA4	27.0"	SKID/TANK, 120 GAL	1,745 LBS

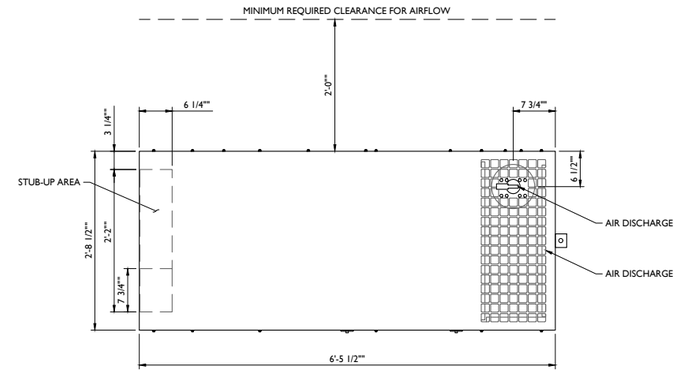

TOP VIEW

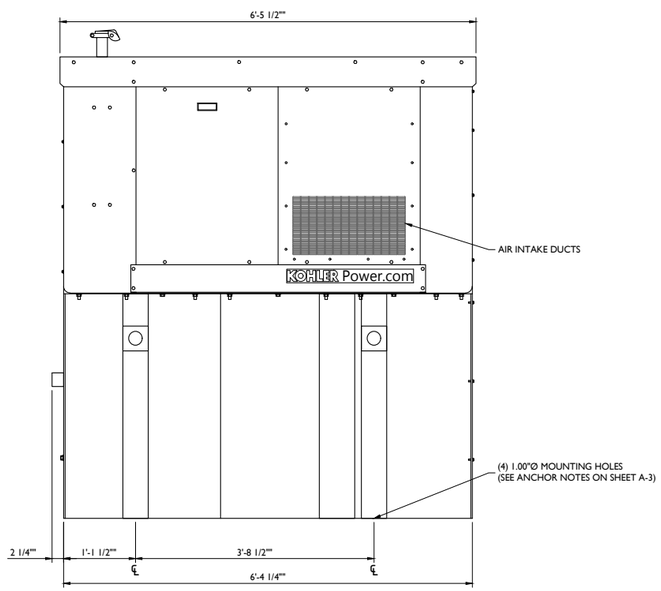

LEFT SIDE VIEW

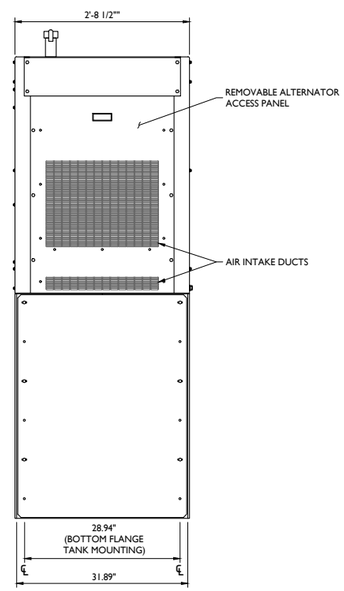

REAR VIEW

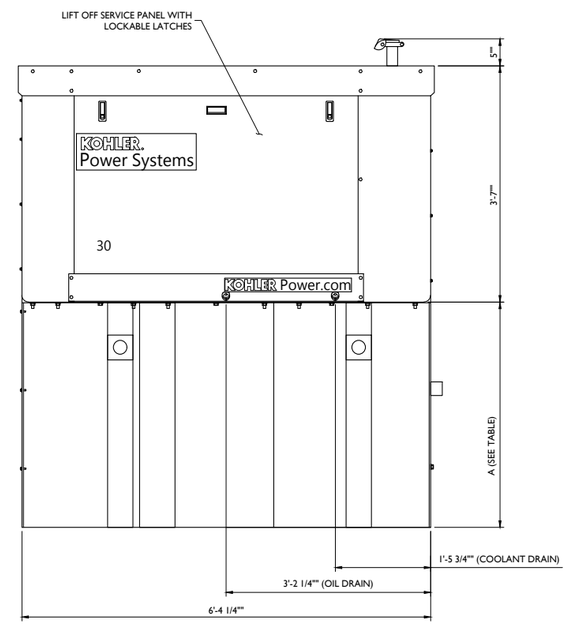

RIGHT SIDE VIEW
(SERVICE SIDE)

DIESEL SOUND ENCLOSURE
WITH LIFT OFF PANEL

30kW KOHLER DIESEL GENERATOR DETAIL

NOT TO SCALE

MASER CONSULTING P.A.
Customer Loyalty through Client Satisfaction
www.maserconsulting.com
Engineers ■ Planners ■ Surveyors
Landscape Architects ■ Environmental Scientists
Office Locations:
■ Red Bank, NJ ■ Clinton, NJ ■ Hamilton, NJ ■ Marmora, NJ ■ Mt. Arlington, NJ ■ Mt. Laurel, NJ
■ Sterling, VA ■ Norfolk, VA ■ Albuquerque, NM ■ Albany, NY ■ Chestnut Ridge, NY ■ Newburgh, NY
■ Hawthorne, NY ■ Lehigh Valley, PA ■ Exton, PA ■ Philadelphia, PA ■ Columbia, MD ■ Tampa, FL
State of D.E. Certificate of Authorization: 2840

Copyright © 2018 Maser Consulting P.A. All Rights Reserved. This drawing and all the information contained herein is authorized for use only by the party for whom the services were contracted or to whom it is certified. This drawing may not be copied, reused, disclosed, distributed or relied upon for any other purpose without the express written consent of Maser Consulting P.A.

verizon

CELLCO PARTNERSHIP d/b/a
VERIZON WIRELESS
512 TOWNSHIP LINE ROAD
BUILDING 2, FLOOR 3
BLUE BELL, PA 19422

811 Know what's below. Call before you dig.
PROTECT YOURSELF
ALL STATES REQUIRE NOTIFICATION OF EXCAVATORS BEFORE ANY OR ANY PERSON PREPARING TO DISTURB THE EARTH'S SURFACE ANYWHERE IN ANY STATE
FOR STATE SPECIFIC DIRECT PHONE NUMBERS VISIT: WWW.CALL811.COM

SCALE: AS SHOWN
JOB NUMBER: 18960085A

REV	DATE	DESCRIPTION	BY	CHK'D	CHECKED BY
0	11/02/18	ISSUED FOR REVIEW	MEG	MPC	
A	11/01/18	ISSUED FOR REVIEW	MEG	MEG	

MICHAEL P. CLEARY LICENSE No. 19205 DELAWARE PROFESSIONAL ENGINEER

IT IS A VIOLATION OF LAW FOR ANY PERSONS, UNLESS THEY ARE ACTING UNDER THE DIRECTION OF THE RESPONSIBLE LICENSED PROFESSIONAL ENGINEER, TO ALTER THIS DOCUMENT.

SITE NAME:
DOV GEORGETOWN CIRCLE
335 N. RACE STREET
GEORGETOWN, DE 19947
SUSSEX COUNTY

MT. LAUREL OFFICE
2000 Midlantic Drive
Suite 100
Mt. Laurel NJ 08054
Phone: .856.797.0412
Fax: .856.722.1120
email: solutions@maserconsulting.com

SHEET TITLE: CONSTRUCTION DETAILS

SHEET NUMBER: A-4

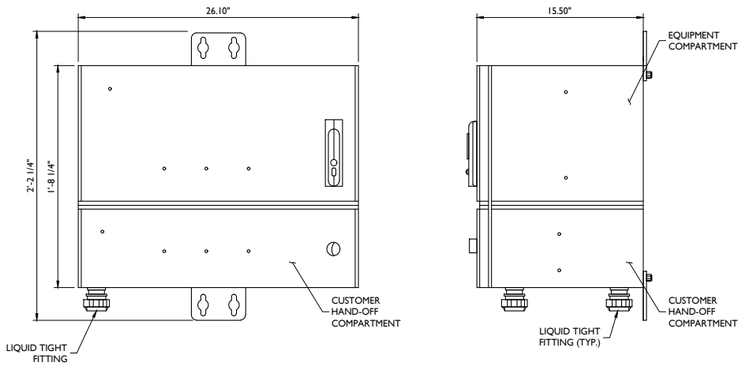

ELEVATION VIEW

SIDE VIEW

CHARLES INDUSTRIES RL2000A CUBE

NOT TO SCALE

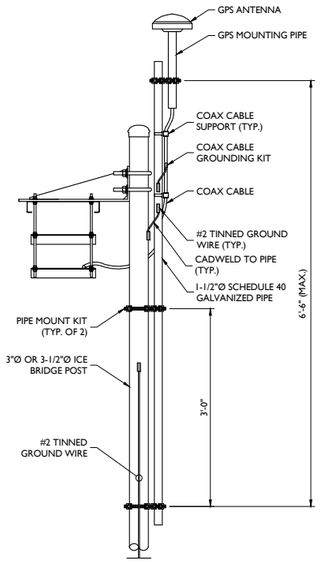

GPS MOUNTING DETAIL

NOT TO SCALE

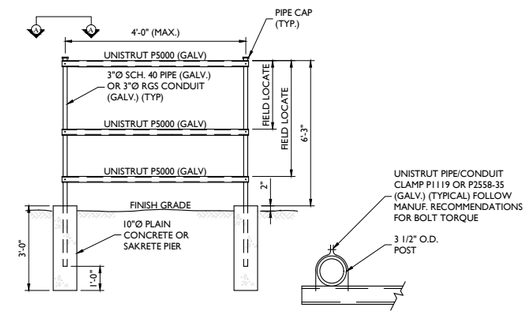

ELEVATION VIEW

SECTION "A-A"

UTILITY BACKBOARD DETAIL

NOT TO SCALE

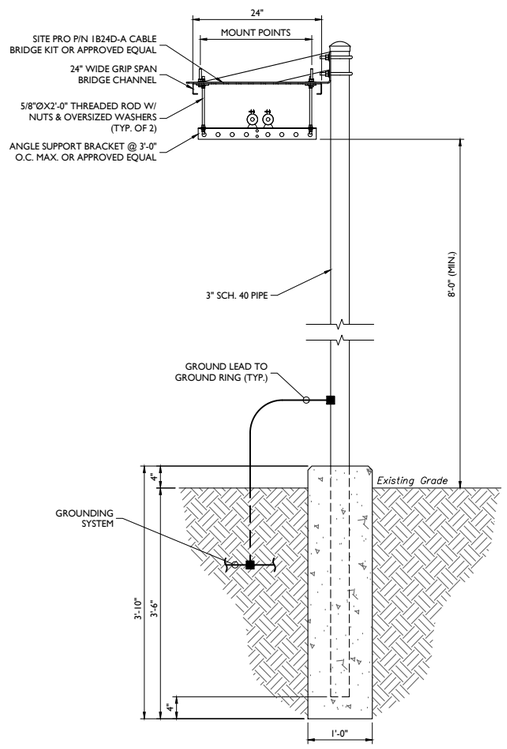

CABLE BRIDGE DETAIL

NOT TO SCALE

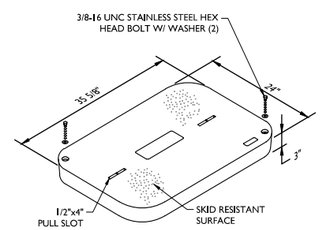

COVER

NOTE:

1. COVER TO BE MADE OF HEAVY DUTY POLYMER CONCRETE AND RATED FOR 15,000 lbs (MIN.)

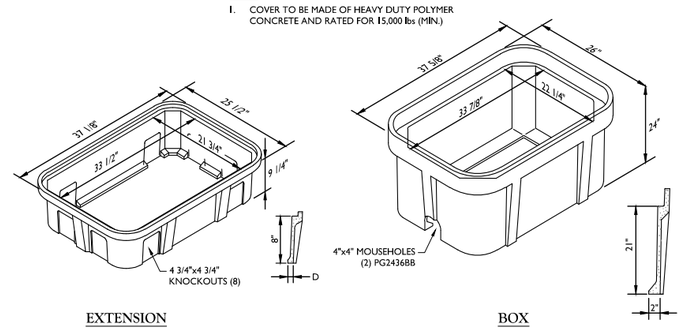

EXTENSION

BOX

PULL BOX DETAIL

NOT TO SCALE

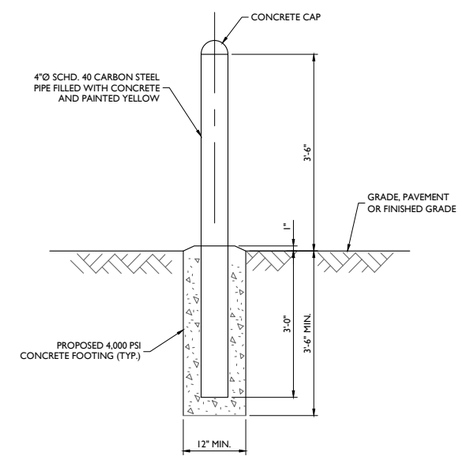

BOLLARD DETAIL

NOT TO SCALE

MASER CONSULTING P.A.
Customer Loyalty through Client Satisfaction
www.maserconsulting.com
Engineers ■ Planners ■ Surveyors
Landscape Architects ■ Environmental Scientists
Office Locations:
■ Red Bank, NJ ■ Clinton, NJ ■ Hamilton, NJ ■ Marmora, NJ ■ Mt. Arlington, NJ ■ Mt. Laurel, NJ
■ Sterling, VA ■ Norfolk, VA ■ Albuquerque, NM ■ Albany, NY ■ Chestnut Ridge, NY ■ Newburgh, NY
■ Hawthorne, NY ■ Lehigh Valley, PA ■ Exton, PA ■ Philadelphia, PA ■ Columbia, MD ■ Tampa, FL
State of D.E. Certificate of Authorization: 2840

Copyright © 2018 Maser Consulting P.A. All Rights Reserved. This drawing and all the information contained herein is authorized for use only by the party for whom the services were contracted or to whom it is certified. This drawing may not be copied, reused, disclosed, distributed or relied upon for any other purpose without the express written consent of Maser Consulting P.A.

verizon

CELLCO PARTNERSHIP d/b/a
VERIZON WIRELESS
512 TOWNSHIP LINE ROAD
BUILDING 2, FLOOR 3
BLUE BELL, PA 19422

811 Know what's below. Call before you dig.

PROTECT YOURSELF
ALL STATES REQUIRE NOTIFICATION OF EXCAVATORS BEFORE ANY OR ANY PERSON PREPARING TO DISTURB THE EARTH'S SURFACE ANYWHERE IN ANY STATE

FOR STATE SPECIFIC DIRECT PHONE NUMBERS VISIT: WWW.CALL811.COM

SCALE:	JOB NUMBER:
AS SHOWN	18960085A

REV	DATE	DESCRIPTION	BY	CHK'D	CHECKED SET
0	11/02/18	ISSUED FOR REVIEW	MEG	MPC	
A	11/01/18	ISSUED FOR REVIEW	MEG	MEG	

MICHAEL P. CLEARY LICENSE No. 19205 DELAWARE PROFESSIONAL ENGINEER

IT IS A VIOLATION OF LAW FOR ANY PERSONS, UNLESS THEY ARE ACTING UNDER THE DIRECTION OF THE RESPONSIBLE LICENSED PROFESSIONAL ENGINEER, TO ALTER THIS DOCUMENT.

SITE NAME:

DOV GEORGETOWN CIRCLE
335 N. RACE STREET
GEORGETOWN, DE 19947
SUSSEX COUNTY

MT. LAUREL OFFICE
2000 Midlantic Drive
Suite 100
Mt. Laurel NJ 08054
Phone: .856.797.0412
Fax: .856.722.1120
email: solutions@maserconsulting.com

SHEET TITLE:
CONSTRUCTION DETAILS

SHEET NUMBER:
A-5

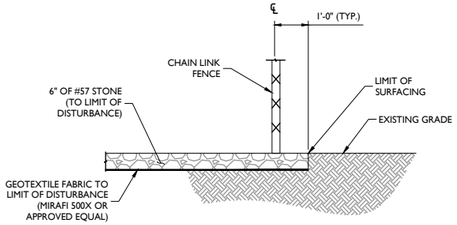

COMPOUND SURFACING

NOT TO SCALE

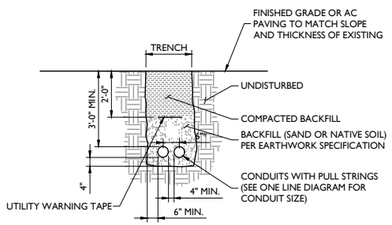

* SEPARATION DIMENSION TO BE VERIFIED WITH LOCAL UTILITY COMPANY REQUIREMENTS.

UTILITY CONDUIT RUN

NOT TO SCALE

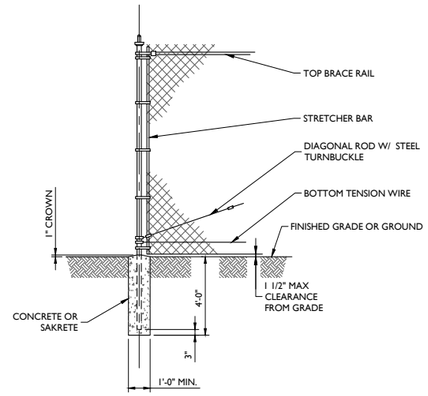

WOVEN WIRE CORNER, GATE, END, OR PULL POST

NOT TO SCALE

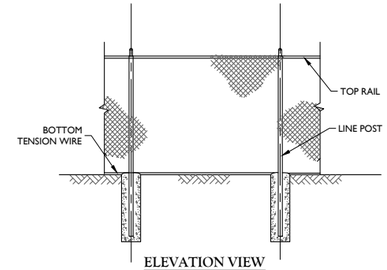

ELEVATION VIEW

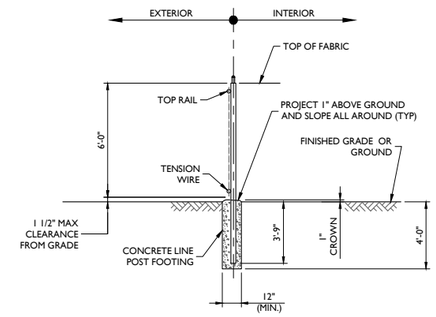

SECTION VIEW

WOVEN WIRE FENCE DETAIL

NOT TO SCALE

FENCE NOTES:

1. GATE POST, CORNER, TERMINAL OR PULL POST SHALL BE 3"Ø SCHEDULE 40 FOR GATE WIDTHS UP THROUGH 7 FEET OR 14 FEET FOR DOUBLE SWING GATE PER ASTM-F1083.
2. LINE POST: 2-3/8"Ø SCHEDULE 40 PIPE PER ASTM-F1083.
3. GATE FRAME: 1 1/2"Ø SCHEDULE 40 PIPE PER ASTM-F1083.
4. TOP RAIL & BRACE RAIL: 1 1/4"Ø SCHEDULE 40 PIPE PER ASTM-F1083.
5. FABRIC: 9 GA. CORE WIRE SIZE 2" MESH, CONFORMING TO ASTM-A392 CLASS 1.
6. TIE WIRE: MINIMUM 11 GA GALVANIZED STEEL INSTALL A SINGLE WRAP TIE WIRE AT POSTS AND RAILS AT MAX. 24" INTERVALS. INSTALL HOG RINGS ON TENSION WIRE AT 24" INTERVALS.
7. TENSION WIRE: 7 GA. GALVANIZED STEEL.
8. GATE LATCH: 1-3/8" O.D. PLUNGER ROD W/ MUSHROOM TYPE CATCH AND LOCK.
9. LOCAL ORDINANCE FOR BARBED WIRE PERMIT SHALL GOVERN INSTALLATION.
10. HEIGHT = 6'-0" VERTICAL DIMENSION.
11. ALL WORK SHALL CONFORM WITH THE PROJECT SPECIFICATIONS.
12. PRIVACY SLATS TO BE PROVIDED WHERE NOTED ON THE PLANS.

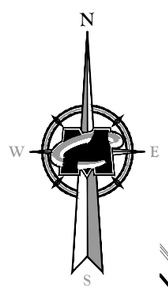

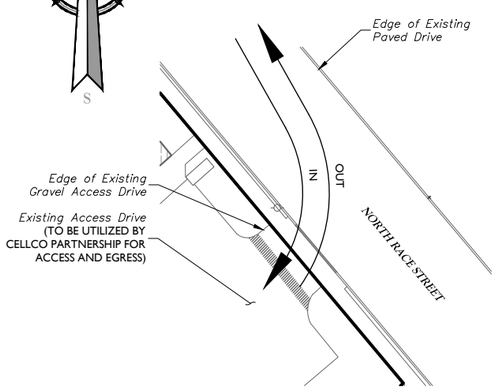

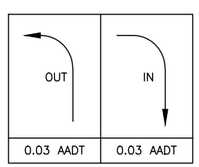

TRIP GENERATION / DISTRIBUTION DIAGRAM

20 16 12 8 4 0 10 20 40

SCALE : 1" = 20' FOR 22"X34"
(SCALE : 1" = 40' FOR 11"X17")

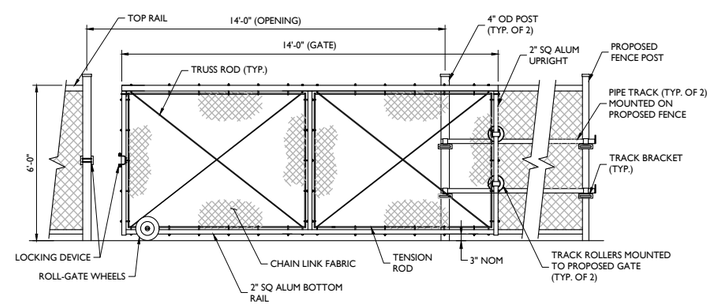

ROLLING GATE DETAIL

NOT TO SCALE

MASER CONSULTING P.A.
Customer Loyalty through Client Satisfaction
www.maserconsulting.com
Engineers ■ Planners ■ Surveyors
Landscape Architects ■ Environmental Scientists
Office Locations:
■ Red Bank, NJ ■ Clinton, NJ ■ Hamilton, NJ ■ Marmora, NJ ■ Mt. Arlington, NJ ■ Mt. Laurel, NJ
■ Sterling, VA ■ Norfolk, VA ■ Albuquerque, NM ■ Albany, NY ■ Chestnut Ridge, NY ■ Newburgh, NY
■ Hawthorne, NY ■ Lehigh Valley, PA ■ Exton, PA ■ Philadelphia, PA ■ Columbia, MD ■ Tampa, FL
State of D.E. Certificate of Authorization: 2840

Copyright © 2018 Maser Consulting P.A. All Rights Reserved. This drawing and all the information contained herein is authorized for use only by the party for whom the services were contracted or to whom it is certified. This drawing may not be copied, reused, disclosed, distributed or relied upon for any other purpose without the express written consent of Maser Consulting P.A.

verizon

CELLCO PARTNERSHIP d/b/a
VERIZON WIRELESS
512 TOWNSHIP LINE ROAD
BUILDING 2, FLOOR 3
BLUE BELL, PA 19422

811 Know what's below. Call before you dig.

PROTECT YOURSELF
ALL STATES REQUIRE NOTIFICATION OF EXCAVATORS, DIGGERS OR ANY PERSON PREPARING TO DISTURB THE EARTH'S SURFACE ANYWHERE IN ANY STATE

FOR STATE SPECIFIC DIRECT PHONE NUMBERS VISIT: WWW.CALL811.COM

SCALE :	JOB NUMBER :
AS SHOWN	18960085A

REV	DATE	DESCRIPTION	DRWN BY	CHECKED BY
0	11/02/18	ISSUED FOR REVIEW	MEG	MPC
A	11/01/18	ISSUED FOR REVIEW	MEG	MEG

MICHAEL P. CLEARY LICENSE No. 19205 DELAWARE PROFESSIONAL ENGINEER

IT IS A VIOLATION OF LAW FOR ANY PERSON, UNLESS THEY ARE ACTING UNDER THE DIRECTION OF THE RESPONSIBLE LICENSED PROFESSIONAL ENGINEER, TO ALTER THIS DOCUMENT.

SITE NAME:

DOV GEORGETOWN CIRCLE
335 N. RACE STREET
GEORGETOWN, DE 19947
SUSSEX COUNTY

MT. LAUREL OFFICE
2000 Midlantic Drive
Suite 100
Mt. Laurel NJ 08054
Phone: 856.797.0412
Fax: 856.722.1120
email: solutions@maserconsulting.com

SHEET TITLE :
CONSTRUCTION DETAILS

SHEET NUMBER :
A-6

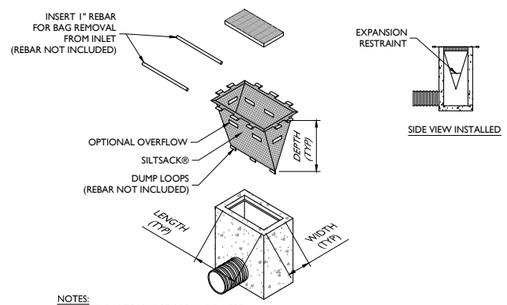

NOTES:

1. MAXIMUM DRAINAGE AREA = 1/2 ACRE
2. AT A MINIMUM, THE FABRIC SHALL HAVE A MINIMUM GRAB TENSILE STRENGTH OF 120 LBS., A MINIMUM BURST STRENGTH OF 200 PSI, AND A MINIMUM TRAPEZOIDAL TEAR STRENGTH OF 50 LBS. FILTER BAGS SHALL BE CAPABLE OF TRAPPING ALL PARTICLES NOT PASSING A NO. 40 SIEVE.
3. INLET FILTER BAGS SHALL BE INSPECTED ON A WEEKLY BASIS AND AFTER EACH RUNOFF EVENT. BAGS SHALL BE EMPTIED AND RINSED OR REPLACED WHEN HALF FULL OR WHEN FLOW CAPACITY HAS BEEN REDUCED SO AS TO CAUSE FLOODING OR BYPASSING OF THE INLET. DAMAGED OR CLOGGED BAGS SHALL BE REPLACED. A SUPPLY SHALL BE MAINTAINED ON SITE FOR REPLACEMENT OF BAGS. ALL NEEDED REPAIRS SHALL BE INITIATED IMMEDIATELY AFTER INSPECTION. DISPOSE OF ACCUMULATED SEDIMENT AS WELL AS ALL USED BAGS ACCORDING TO PLAN NOTES.

SILTSACK INLET SEDIMENT CONTROL DEVICE-TYPE A WITHOUT FOAM DEFLECTOR

NOT TO SCALE

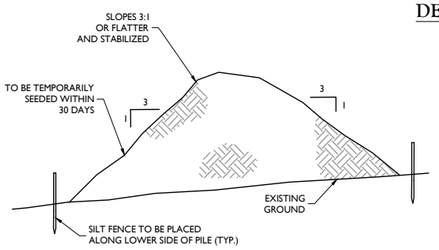

TOPSOIL STOCKPILE DETAIL

NOT TO SCALE

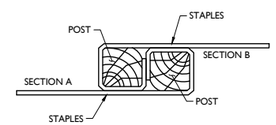

TOP

CONSTRUCTION DETAIL

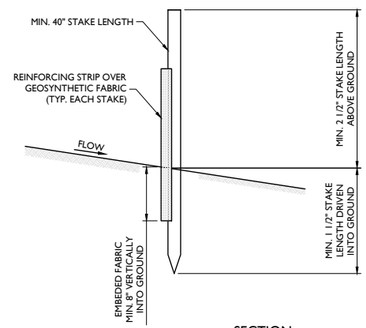

SECTION

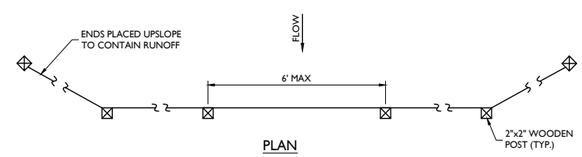

PLAN

SILT FENCE MATERIALS

1. STAKES: STEEL (EITHER T OR U) OR 2" X 2" HARDWARE
2. GEOSYNTHETIC FABRIC: TYPE GD-1
3. REINFORCING STRIP: WOODEN LATH, PLASTIC STRIP OR OTHER APPROVED EQUIVALENT
4. PREFABRICATED UNIT: GEOFAB, ENVIROFENCE, OR APPROVED EQUIVALENT.

CONSTRUCTION NOTES:

1. GEOSYNTHETIC FABRIC TO BE FASTENED SECURELY TO FENCE POSTS WITH WIRE TIES OR STAPLES.
2. WHEN TWO (2) SECTIONS OF FILTER CLOTH ADJOIN EACH OTHER, THEY SHALL BE OVERLAPPED BY SIX (6) INCHES AND FOLDED.
3. SILT FENCE MUST BE INSPECTED ON A REGULAR BASIS. REPAIRS SHOULD BE MADE IMMEDIATELY. ACCUMULATED SEDIMENT SHOULD BE REMOVED WHEN IT HAS REACHED 1/2 THE EXPOSED HEIGHT OF THE FABRIC OR WHEN "BULGES" DEVELOP IN THE SILT FENCE.

SILT FENCE DETAIL

NOT TO SCALE

MASER CONSULTING P.A.
Customer Loyalty through Client Satisfaction
www.maserconsulting.com
Engineers ■ Planners ■ Surveyors
Landscape Architects ■ Environmental Scientists
Office Locations:
■ Red Bank, NJ ■ Clinton, NJ ■ Hamilton, NJ ■ Marmora, NJ ■ Mt. Arlington, NJ ■ Mt. Laurel, NJ
■ Sterling, VA ■ Norfolk, VA ■ Albuquerque, NM ■ Albany, NY ■ Chestnut Ridge, NY ■ Newburgh, NY
■ Hawthorne, NY ■ Lehigh Valley, PA ■ Exton, PA ■ Philadelphia, PA ■ Columbia, MD ■ Tampa, FL
State of D.E. Certificate of Authorization: 2840

Copyright © 2018 Maser Consulting P.A. All Rights Reserved. This drawing and all the information contained herein is authorized for use only by the party for whom the services were contracted or to whom it is certified. This drawing may not be copied, reused, disclosed, distributed or relied upon for any other purpose without the express written consent of Maser Consulting P.A.

verizon

CELLCO PARTNERSHIP d/b/a
VERIZON WIRELESS
512 TOWNSHIP LINE ROAD
BUILDING 2, FLOOR 3
BLUE BELL, PA 19422

811 Know what's below. Call before you dig.

PROTECT YOURSELF
ALL STATES REQUIRE NOTIFICATION OF EXCAVATORS, DESIGNERS OR ANY PERSON PREPARING TO DISTURB THE EARTH'S SURFACE ANYWHERE IN ANY STATE

FOR STATE SPECIFIC DIRECT PHONE NUMBERS VISIT: WWW.CALL811.COM

SCALE:	JOB NUMBER:
AS SHOWN	18960085A

REV	DATE	DESCRIPTION	DRAWN BY	CHECKED BY
0	11/02/18	ISSUED FOR REVIEW	MEG	MPC
A	11/01/18	ISSUED FOR REVIEW	MEG	MEG

MICHAEL P. CLEARY
No. 19205
DELAWARE PROFESSIONAL ENGINEER - LICENSE NUMBER: 19205
FOR DELAWARE
PROFESSIONAL ENGINEER

IT IS A VIOLATION OF LAW FOR ANY PERSONS, UNLESS THEY ARE ACTING UNDER THE DIRECTION OF THE RESPONSIBLE LICENSED PROFESSIONAL ENGINEER, TO ALTER THIS DOCUMENT.

SITE NAME:

DOV GEORGETOWN CIRCLE
335 N. RACE STREET
GEORGETOWN, DE 19947
SUSSEX COUNTY

MT. LAUREL OFFICE
2000 Midlantic Drive
Suite 100
Mt. Laurel NJ 08054
Phone: 856.797.0412
Fax: 856.722.1120
email: solutions@maserconsulting.com

SHEET TITLE:
CONSTRUCTION DETAILS

SHEET NUMBER:
A-7

SOIL EROSION AND SEDIMENT CONTROL PLAN

TEMPORARY SEEDING (3.4.3-5):

1. SITE PREPARATION

   A. PRIOR TO SEEDING, INSTALL NEEDED EROSION AND SEDIMENT CONTROL PRACTICES SUCH AS DIVERSIONS, GRADE STABILIZATION STRUCTURES, BERMS, DIKES, GRASSED WATERWAYS, AND SEDIMENT BASINS.

   B. FINAL GRADING AND SHAPING IS NOT NECESSARY FOR TEMPORARY SEEDINGS.

2. SEEDBED PREPARATION

   IT IS IMPORTANT TO PREPARE A GOOD SEEDBED TO INSURE THE SUCCESS OF ESTABLISHING VEGETATION. THE SEEDBED SHOULD BE WELL OTHER OBJECTIONABLE MATERIAL. THE SOIL SURFACE SHOULD NOT BE COMPACTED OR CRUSTED.

3. SOIL AMENDMENTS-SOIL AMENDMENTS ARE NOT TYPICALLY REQUIRED FOR TEMPORARY STABILIZATION. HOWEVER, IN SOME CASES SOILS CONDITIONS MAY BE SO POOR THAT AMENDMENTS ARE NEEDED TO ESTABLISH EVEN A TEMPORARY VEGETATIVE COVER. UNDER THESE EXTREME CONDITIONS, THE FOLLOWINGS GUIDELINES SHOULD BE USED:

   A. LIME - APPLY LIMING MATERIALS BASED ON THE RECOMMENDATIONS OF A SOIL TEST IN ACCORDANCE WITH THE APPROVED NUTRIENT MANAGEMENT PLAN. IF A NUTRIENT MANAGEMENT PLAN IS NOT REQUIRED, APPLY DOLOMITIC LIMESTONE AT THE RATE OF 1 TO 2 TONS PER ACRE. APPLY LIMESTONE UNIFORMLY AND INCORPORATE INTO THE TOP 4 TO 6 INCHES OF SOIL.

   B. FERTILIZER - APPLY FERTILIZER BASED ON THE RECOMMENDATIONS OF A SOIL TEST IN ACCORDANCE WITH APPROVED NUTRIENT MANAGEMENT PLAN. IF A NUTRIENT MANAGEMENT PLAN IS NOT REQUIRED, APPLY A FORMULATION OF 10-10-10 AT THE RATE OF 600 POUNDS PER ACRE. APPLY FERTILIZER UNIFORMLY AND INCORPORATE INTO THE TOP 4 TO 6 INCHES OF SOILS.

4. SEEDING

   A. SELECT A MIXTURE FROM FIGURE 3.4.3.2a

   B. APPLY SEED UNIFORMLY WITH A BROADCAST SEEDER, DRILL, CULTIPACKER SEEDER OR HYDROSEEDER. ALL WILL BE APPLIED AT THE RECOMMENDED RATE AND PLANTING DEPTH.

   C. SEED THAT HAS BEEN BROADCAST SHOULD BE COVERED BY RAKING OR DRAGGING AND THEN LIGHTLY TAMPED INTO PLACE USING A ROLLER OR CULTIPACKER. IF HYDROSEEDING IS USED AND THE SEED AND FERTILIZER IS MIXED, THE WILL BE MIXED ON SITE AND THE SEEDING SHALL BE DONE IMMEDIATELY AND WITHOUT INTERRUPTION.

5. MULCHING

   ALL MULCHING SHALL BE DONE IN ACCORDANCE WITH SECTION 3.4.5

TEMPORARY SEEDING BY RATES, DEPTHS AND DATES

Mix #	Species[8]	Seeding Rate		Optimum Seeding Dates[1] O = Optimum Planting Period; A = Acceptable Planting Period							Planting Depth[3]
				Coastal Plain			Piedmont			All	
	Certified Seed	lb/Ac[5]	lb/1000 sq.ft.	2/1-4/30	[2] 5/1-8/14	8/15-10/31	3/1-4/30	[2] 5/1-7/31	8/1-10/31	10/31-2/1	
1	Barley	125	4	O	A	O	O	A	O		1-2 inches 2-3" sandy soils
2	Oats	125	4	O	A	A	O	A	A		1-2 inches 2-3" sandy soils
3	Rye	125	4	O	A	O	O	A	O	A	1-2 inches 2-3" sandy soils
4	Perennial Ryegrass	125	4	O	A	O	O	A	O		0.5 inches 1-2" sandy soils
5	Annual Ryegrass	125	4	O	A	O	O	A	O	A	0.5 inches 1-2" sandy soils
6	Winter Wheat	125	4	O	A	O	O	A	O	A	1-2 inches 2-3" sandy soils
7	Foxtail Millet	30 PLS	0.7		O			O			0.5 inches 1-2" sandy soils
8	Pearl Millet	20 PLS	0.5		O			O			0.5 inches 1-2" sandy soils

1. Winter seeding requires 3 tons per acre of straw mulch for proper stabilization.
2. May be planted throughout summer if soil moisture is adequate or seeded area can be irrigated.
3. Applicable on slopes 3:1 or less.
4. Fifty pounds per acre of Annual Lespedeza may be added to 1/2 the seeding rate of any of the above species.
5. Use varieties currently recommended for Delaware. Contact a County Extension Office for information.
6. Warm season grasses such as Millet or Weeping Lovegrass may be used between 5/1 and 9/1 if desired. Seed at 3-5 lbs. per acre. Good on low fertility and acid areas. Seed after frost through summer at a depth of 0.5".

Figure 3.4.3.2a Temporary seeding guidelines

PERMANENT SEEDING (3.4.3-9):

1. SITE PREPARATION

   A. PRIOR TO SEEDING, INSTALL NEEDED EROSION AND SEDIMENT CONTROL PRACTICES SUCH ASDIVERSIONS, GRADE STABILIZATION STRUCTURES, BERMS, DIKES, GRASSED WATERWAYS AND SEDIMENT BASINS.

   B. GRADE AS NEEDED AND FEASIBLE TO PERMIT THE USE OF CONVENTIONAL EQUIPMENT FOR SEEDBED PREPARATION, SEEDING, MULCH APPLICATION, ANCHORING AND MAINTENANCE. ALL IRREGULARITIES IN THE SURFACE MUST BE CORRECTED IN ORDER TO PREVENT THE FORMATION OF DEPRESSIONS OR WATER POCKETS.

2. SEEDBED PREPARATION

   A. IT IS IMPORTANT TO PREPARE A GOOD SEEDBED TO INSURE THE SUCCESS OF ESTABLISHING VEGETATION. THE SEEDBED SHALL BE WELL PULVERIZED, LOOSE, UNIFORM, AND FREE OF LARGE CLODS, ROCKS AND OTHER OBJECTIONABLE MATERIAL

   B. FLAT AREAS AND SLOPES UP TO 3:1 GRADE SHALL BE LOOSE AND FRIABLE TO A DEPTH OF AT LEAST 4 INCHES. THE TOP LAYER OF SOIL SHALL BE LOOSENED BY RAKING, DISKING OR OTHER ACCEPTABLE MEANS BEFORE SEEDING.

   C. SLOPES STEEPER THAN 3:1 SHALL HAVE THE TOP 1-3 INCHES OF SOIL LOOSE AND FRIABLE BEFORE SEEDING.

3. SOIL AMENDMENTS:

   A. LIME - APPLY LIMING MATERIALS BASED ON THE RECOMMENDATIONS OF A SOIL TEST IN ACCORDANCE WITH THE APPROVED NUTRIENT MANAGEMENT PLAN. IF A NUTRIENT MANAGEMENT PLAN IS NOT REQUIRED, APPLY DOLOMITIC LIMESTONE AT THE RATE OF 1 TO 2 TONS PER ACRE. APPLY LIMESTONE UNIFORMLY AND INCORPORATE INTO THE TOP 4 TO 6 INCHES OF SOIL.

   B. FERTILIZER - APPLY FERTILIZER BASED ON THE RECOMMENDATIONS OF A SOIL TEST IN ACCORDANCE WITH APPROVED NUTRIENT MANAGEMENT PLAN. IF A NUTRIENT MANAGEMENT PLAN IS NOT REQUIRED, APPLY A FORMULATION OF 10-10-10 AT THE RATE OF 600 POUNDS PER ACRE. APPLY FERTILIZER UNIFORMLY AND INCORPORATE INTO THE TOP 4 TO 6 INCHES OF SOILS.

   C. INCORPORATION - ON SLOPING LAND, THE FINAL DISKING AND HARROWING OPERATION SHOULD BE ON THE CONTOUR WHEREVER FEASIBLE. ON SLOPES STEEPER THAN 3:1, THE LIME AND FERTILIZER SHALL WORKED IN THE BEST WAY POSSIBLE.

4. SEEDING

   A. SELECT A MIXTURE FROM FIGURE 3.4.3.3a

   B. EVERY BAG OF SEED IS REQUIRED BY LAW TO HAVE AN ANALYSIS TAG ATTACHED TO IT. THIS TAG CONTAINS ESSENTIAL INFORMATION ABOUT THE CONTENT AND QUALITY OF THE TURF SEED THEREIN. ALL OF THE DATA ON THE TAG RELATES IN SOME WAY TO THE SEED IN THE BAG. FOLLOWING IS A LIST OF ITEM AND INFORMATION THAT THE REPRESENT:

   · "PRODUCT" IS THE SPECIES OR TYPE OF SEED THAT WAS TESTED.

   · "LOT" REFERS TO THE SPECIFIC LOT OF SEED TESTED, PROVIDING A TRACKING OF THE VARIETIES, PRODUCTION FIELD AND COMPONENTS IN THE BAG.

   · "% PURITY" IS THE NUMBER OF SEEDS OF A SPECIES/VARIETY, EXPRESS AS PERCENTAGES OF THE WHOLE, FOUND IN THE MIX. "VNS" MEANS "VARIETY NOT STATED" INDICATING UNCERTAINTY ABOUT THE QUALITY AND CHARACTERISTICS OF THE SEED.

   · "% GERMINATION" REFERS TO THE PERCENTAGE OF SEED THAT GERMINATED DURING TESTING.

   · "OTHER CROP SEEDS" IS THE PERCENTAGE OF CROP SEEDS OF THE TESTED SAMPLE THAT BEEN FOUND DURING PHYSICAL SEPARATION OF THE SAMPLE.

   · "INERT MATTER" IS THE PERCENTAGE OF DUST, STEMS, SOIL, CHAFF, ETC. OF THE TOTAL WEIGHT OF THE TESTED SAMPLE.

   · "WEED SEED" REFERS TO THE PERCENTAGE OF WEED SEEDS IN A SAMPLE

   · "NOXIOUS WEEDS" ARE THE WEED SEEDS CONSIDERED BY LOCAL LAW TO BE NOXIOUS. THIS NUMBER MUST ALWAYS BE ZERO.

   · "ORIGIN", "NET WEIGHT" AND "DATE TESTED" ARE SELF-EXPLANATORY.

   C. APPLY SEED UNIFORMLY WITH A BROADCAST SEEDER, DRILL, CULTIPACKER OR HYDROSEEDER. ALL SEED WILL BE APPLIED AT THE RECOMMENDED RATE AND PLANTING DEPTH. DRILL SEEDING IS THE PREFERRED METHOD, ESPECIALLY WHEN LIGHT, FLUFFY SEEDS ARE IN THE MIX. WHEN HYDROSEEDING IS THE CHOSEN METHOD, THE TOTAL RATE OF SEED SHOULD BE INCREASED BY 25% OVER THE RATES RECOMMENDED IN FIGURE 3.4.3.3a. SEED MIXTURES LOADED INTO BOXES OR CONTAINERS, SUCH AS THOSE FOUND ON DRILL SEEDERS, SHOULD BE AGITATED TO PREVENT STRATIFICATION IN THE BOX. SOME SEEDERS ARE ALSO EQUIPPED WITH MULTIPLE BOXED TO SEPARATE THE SEED SPECIES, RESULTING IN EVEN DISTRIBUTION.

   D. SEED THAT HAS BEEN BROADCAST MUST BE COVERED BY RAKING OR DRAGGING AND THEN LIGHTLY TAMPED INTO PLACE USING A ROLLER OR CULTIPACKER. IF HYDROSEEDING IS USED AND THE SEED AND FERTILIZER IS MIXED, THEY WILL BE MIXED ON SITE AND THE SEEDING SHALL BE DONE IMMEDIATELY AND WITHOUT INTERRUPTION.

5. MULCHING

   ALL MULCHING SHALL BE DONE IN ACCORDANCE WITH SECTION 3.4.5

6. IRRIGATION

   A. ADEQUATE MOISTURE IS ESSENTIAL FOR SEED GERMINATION AND PLANT GROWTH. DAILY IRRIGATION CAN BE CRITICAL IN ESTABLISHING PERMANENT VEGETATION DURING DRY OR HOT WEATHER OR ON ADVERSE SITE CONDITIONS.

   B. IRRIGATION MUST BE CAREFULLY CONTROLLED TO PREVENT RUNOFF AND SUBSEQUENT EROSION. INADEQUATE OR EXCESSIVE IRRIGATION CAN BE MORE HARM THAN GOOD.

7. MAINTENANCE

   A. IT TAKES ON FULL YEAR TO ESTABLISH PERMANENT VEGETATION FROM THE TIME OF PLANTING. INSPECT SEEDED AREAS FOR FAILURE AND REESTABLISH VEGETATION AS SOON AS POSSIBLE. DEPENDING ON SITE CONDITIONS, IT MAY BE NECESSARY TO IRRIGATE, FERTILIZE, OVERSEED, OR RE-ESTATLISH PLANTINGS IN ORDER TO PROVIDE PERMANENT VEGETATION FOR ADEQUATE EROSION CONTROL

   B. MAINTENANCE FERTILIZATION RATES SHOULD BE ESTABLISHED BY SOIL TEST RECOMMENDATIONS IN ACCORDANCE WITH AN APPROVED NUTRIENT MANAGEMENT PLAN. SPRING SEEDINGS MAY REQUIRE AN APPLICATION OF FERTILIZER BETWEEN SEPTEMBER 1 AND OCTOBER 15, AT LEAST EVERY TWO YEARS. FALL SEEDINGS MAY REQUIRE THE SAME BETWEEN MARCH 15 AND MAY 1 OF THE FOLLOWING YEAR. IF SLOW RELEASE FERTILIZER IS USED, FOLLOW-UP FERTILIZATIONS MAY NOT BE NECESSARY FOR SEVERAL YEARS. LIME ACCORDING TO SOIL TEST RECOMMENDATIONS AT LEAST ONCE EVERY FIVE YEARS.

8. SPECIAL CONDITIONS

   UNDER CERTAIN SITE CONDITIONS, ALTERNATIVE VEGETATIVE STABILIZATION TECHNIQUES ARE NECESSARY. EXAMPLES INCLUDE STEEPLY SLOPED AREAS, EXTREMELY LOW FERTILITY SOILS, ACIDIC SOILS, (pH LESS THAN 4.0) AND DUNE STABILIZATION. WHEN ANY OF THESE OR OTHER UNUSUAL SITE CONDITIONS ARE ENCOUNTERED, DNREC AND/OR THE APPROPRIATE DELEGATED AGENCY MAY REQUIRE PRODUCTS, SEED SPECIES MIXTURES AND RATES OTHER THAN THOSE LISTED IN THE FOLLOWING TABLES IN ORDER TO ACHIEVE SUCCESSFUL STABILIZATION.

2/03

PERMANENT SEEDING AND SEEDING DATES

Mix No.	Seeding Mixtures: Certified Seed[3] — Well Drained Soils	Seeding Rate[1] lb/Ac	lb/1000 sq.ft.	Coastal Plain 2/1-4/30	5/1-8/14	8/15-10/31	Piedmont 3/1-4/30	5/1-7/31	8/1-10/31	All[4] 10/31-2/1	Remarks
1	Tall Fescue Weeping Lovegrass	140 10	3.2 0.23	A	O	A	A	O	A	Add 100 lbs./ac Winter Rye	Good erosion control mix Tolerant of low fertility soils Lovegrass very difficult to mow; Germinates only in hot weather
2	Deertongue Sheep Fescue Common Lespedeza[5] Inoculated	30 30 15	0.69 0.69 0.35	A	O	A	A	O	A	Add 100 lbs./ac Winter Rye	Good erosion control mix Tolerant of low fertility soils Good wildlife cover and food
3	Tall Fescue (Turf-type) **or** Strong Creeping Red Fescue **or** Perennial Ryegrass **plus** Flatpea[5]	50 50 50 15	1.15 1.15 1.15 0.34	O	A	O	O	A	O	Add 100 lbs./ac. Winter Rye	Good erosion control mix Tall Fescue for droughty conditions. Creeping Red Fescue for heavy shade. Flatpea to suppress woody vegetation.
4	Strong Creeping Red Fescue Kentucky Bluegrass Perennial Ryegrass **or** Redtop **plus** White Clover[5]	100 70 15 5 3	2.3 1.61 0.35 0.11 0.07	O	A	O	O	A	O	Add 100 lbs./ac. Winter Rye	Suitable waterway mix. Canada Bluegrass more drought tolerant. Use Redtop for increased drought tolerance.
5	Switchgrass[6,7] **or** Coastal Panicgrass Big Bluestem Little Bluestem Indian Grass	10 10 5 5 5	0.23 0.23 0.11 0.11 0.1		O			O			Native warm-season mixture. Tolerant of low fertility soils. Drought tolerant. Poor shade tolerance. N fertilizer discouraged - weeds
6	Tall Fescue (turf-type) (Blend of 3 cultivars)	150	3.5	O	A	O	O	A	O		Managed filter strip for nutrient uptake.
7	Tall Fescue Ky. Bluegrass (Blend) Perennial Ryegrass	150 20 20	3.5 0.46 0.46	O	A	O	O	A	O		Three cultivars of Kentucky Bluegrass. Traffic tolerant.
8	Big Bluestem[7] Indian Grass[7] Little Bluestem[7] Creeping Red Fescue **plus one of:** Partridge Pea Bush Clover Wild Indigo Showy Tick-Trefoil	10 10 8 30 5 3 3 2	0.23 0.23 0.18 0.69 0.11 0.07 0.07 0.05	O	A		O	A			All species are native. Indian Grass and Bluestem have fluffy seeds. Plant with a specialized native seed drill. Creeping Red Fescue will provide erosion protection while the warm season grasses get established.

Figure 3.4.3.3a Seed mixes and recommended seeding dates

3.4.3 - 12

Mix No.	Seeding Mixtures: Certified Seed[3] — Poorly Drained Soils	Seeding Rate[1] lb/Ac	lb/1000 sq.ft.	Coastal Plain 2/1-4/30	5/1-8/14	8/15-10/31	Piedmont 3/1-4/30	5/1-7/31	8/1-10/31	All[4] 10/31-2/1	Remarks
9	Redtop Creeping Bentgrass Sheep Fescue Rough Bluegrass	75 35 30 45	1.72 0.8 0.69 1	O	A	O	O	A	O	Add 100 lbs./ac. Winter Rye	Quick stabilization of disturbed sites and waterways
10	Reed Canarygrass[6]	10	0.23	A		O	A		O		Good erosion control, wildlife cover and wetland revegetation.
	Residential Lawns										
11	Tall Fescue Perennial Ryegrass Kentucky Bluegrass Blend	100 25 30	2.3 0.57 0.69	O	A	O	O	A	O		High value, high maintenance, light traffic, irrigation necessary. Well drained soils, full sun.
12	Tall Fescue Perennial Ryegrass Sheep Fescue	100 25 25	2.3 0.57 0.57	O	A	O	O	A	O		Moderate value, low maintenance, traffic tolerant
13	Creeping Red Fescue Chewings Fescue Rough Bluegrass Kentucky Bluegrass	50 50 20 20	1.15 1.15 0.4 0.4	O	A	O	O	A	O		Shade tolerant, moderate traffic tolerance, moderate maintenance.
14	Creeping Red Fescue Rough Bluegrass **or** Chewings Fescue	50 90	1.15 2.1	O	A	O	O	A	O		Shade tolerant, moisture tolerant.
15	K-31 Tall Fescue	150	3.5	O	A	O	O	A	O		Monoculture, but performs well alone in lawns. Discouraged.

1. When hydroseeding is the chosen method of application, the total rate of seed should be increased by 25%.
2. Winter seeding requires 3 tons per acre of straw mulch. Planting dates listed above are average for Delaware. These dates may require adjustment to reflect local conditions.
3. All seed shall meet the minimum purity and minimum germination percentages recommended by the Delaware Department of Agriculture. The maximum % of weed seeds shall be in accordance with Section 1, Chapter 24, Title 3 of the Delaware Code.
4. Cool season species may be planted throughout summer if soil moisture is adequate or seeded area can be irrigated.
5. All leguminous seed must be inoculated.
6. Warm season grass mix and Reed Canary Grass cannot be mowed more than 4 times per year.
7. Warm season grasses require a soil temperature of at least 50 degrees in order to germinate, and will remain dormant until then.

Figure 3.4.3.3a Seed mixes and recommended seeding dates (cont.)

SEQUENCE OF CONSTRUCTION:

EACH STAGE OF THE SEQUENCE OF CONSTRUCTION MUST BE COMPLETED PRIOR TO THE INITIATION OF THE NEXT STAGE OF CONSTRUCTION.

DESCRIPTION	TIME FRAME
INSTALL STABILIZED CONSTRUCTION ENTRANCE. INSTALL PERIMETER SILT FENCE.	4 DAYS
CLEAR AND GRUB SITE. REMOVE EXCESS TOPSOIL FROM SITE AND STOCKPILE. REMAINDER OF TOPSOIL REQUIRED FOR RE-USE ON SITE.	2 DAYS
PERFORM ROUGH GRADING OF COMPOUND AREA AND ACCESS ROAD. REESTABLISH STABILIZED CONSTRUCTION ENTRANCE AS REQUIRED TO MATCH PRE-EXISTING CONDITION IMMEDIATELY FOLLOWING GRADING OF ACCESS DRIVE.	5 DAYS
INSTALL UNDERGROUND UTILITIES, CONCRETE PADS AND APPROPRIATE SEDIMENT CONTROLS AS INSTALLATION PROGRESSES.	10 DAYS
PROVIDE INTERIM SOIL STABILIZATION MEASURES OF DISTURBED AREAS. SEED AND MULCH AREAS TO NORTH, SOUTH, EAST AND WEST OF PROPOSED GRAVEL AREA. ANY AREAS WITH INTERIM STABILIZATION THAT BECOME DISTURBED AS A RESULT OF SUBSEQUENT CONSTRUCTION ACTIVITY (I.E. ERECTION OF MONOPOLE) SHALL BE REESTABLISHED PER INTERIM STABILIZATION SPECIFICATIONS ON THIS SHEET.	1 DAY
POUR CONCRETE FOUNDATION	2 DAYS
CURE CONCRETE	28 DAYS
ERECT MONOPOLE.	7 DAYS
PERFORM FINE GRADING ON SITE SUBGRADE. STABILIZE COMPOUND AND DRIVEWAY BY INSTALLING DENSE GRADED AGGREGATE. TOPSOIL, SEED, FERTILIZE AND MULCH DISTURBED AREAS OUTSIDE GRAVEL COMPOUND.	2 DAYS
REMOVE SEDIMENT CONTROLS AND OTHER BMP'S. ALL BMP'S MUST REMAIN INSTALLED AND FUNCTIONAL UNTIL UPSLOPE DISTURBED AREAS ARE STABILIZED WITH 70% UNIFORM PERENNIAL VEGETATIVE COVER OR OTHER STABLE COVER.	2 DAYS

SEDIMENT CONTROL NOTES:

1. A COPY OF THE APPROVED SOIL EROSION AND SEDIMENTATION CONTROL PLAN SHALL BE AVAILABLE AT ALL AL TIMES.
2. TEMPORARY STABILIZATION (SEEDING AND MULCHING) OF THE SITE SHALL BE PERFORMED IMMEDIATELY AFTER COMPLETION OF ROUGH GRADING.
3. THE CONTRACTOR SHALL INSPECT THE SITE AT THE END OF EACH DAY TO ENSURE THAT NO DISTURBED SOIL EXISTS ON THE SITE AND THAT NO SOIL/MUD IS BEING TRACKED OFF THE SITE AND ONTO ANY ADJACENT ROADWAY.
4. REFER TO DELAWARE EROSION & SEDIMENT CONTROL HANDBOOK REGARDING APPLICABLE DESIGN GUIDELINES SOIL EROSION AND SEDIMENTATION CONTROL.
5. ANY MAJOR VARIATION FROM THE SEQUENCE OF CONSTRUCTION STATED IN THE NARRATIVE REPORT REQUIRES THE APPROVAL OF THE SUSSEX COUNTY CONSERVATION DISTRICT PRIOR TO THE INITIATION OF THE CHANGE.
6. THE SUSSEX COUNTY CONSERVATION DISTRICT WILL BE NOTIFIED THREE DAYS PRIOR TO CONSTRUCTION.
7. ALL TEMPORARY CONTROLS SHALL REMAIN IN PLACE UNTIL THE SITE IS COMPLETELY STABILIZED.
8. ANY SOIL REQUIRED TO BE STOCKPILED ON THE SITE SHALL BE STABILIZED AND PROTECTED WITH SILT FENCING.
9. EROSION AND SEDIMENTATION CONTROLS MUST BE CONSTRUCTED, STABILIZED AND FUNCTIONAL BEFORE SITE DISTURBANCE WITHIN THE TRIBUTARY AREAS OF THOSE CONTROLS.
10. AFTER FINAL SITE STABILIZATION HAS BEEN ACHIEVED, TEMPORARY EROSION AND SEDIMENTATION CONTROLS MUST BE REMOVED. AREA DISTURBED DURING REMOVAL OF THE CONTROLS MUST BE STABILIZED IMMEDIATELY.
11. STOCKPILED HEIGHTS MUST NOT EXCEED 35 FT. STOCKPILE SLOPES MUST BE 3:1 OR FLATTER. STOCKPILES MUST BE STABILIZED UPON COMPLETION.
12. ANY DISTURBED AREA ON WHICH ACTIVITY HAS CEASED AND WHICH WILL REMAIN EXPOSED MUST BE STABILIZED IMMEDIATELY. DURING NON-GERMINATION PERIODS, MULCH MUST BE APPLIED AT THE RECOMMENDED RATES. DISTURBED AREAS WHICH ARE NOT AT FINISHED GRADE AND WHICH WILL BE REDISTURBED WITHIN 1 YEAR MAY BE STABILIZED IN ACCORDANCE WITH TEMPORARY SEEDING SPECIFICATIONS. DISTURBED AREAS WHICH ARE EITHER AT FINISHED GRADE OR WILL NOT BE DISTURBED WITHIN 1 YEAR MUST BE STABILIZED IN ACCORDANCE WITH PERMANENT SEEDING SPECIFICATIONS.
13. UNTIL THE SITE IS STABILIZED, ALL EROSION AND SEDIMENTATION CONTROLS MUST BE MAINTAINED PROPERLY. MAINTENANCE MUST INCLUDE INSPECTIONS OF ALL CONTROLS AFTER EACH RUNOFF EVENT AND ON A WEEKLY BASIS. ALL PREVENTATIVE AND REMEDIAL MAINTENANCE WORK, INCLUDING CLEAN OUT, REPAIR, REPLACEMENT, REGRADING, RESEEDING AND REMULCHING MUST BE PERFORMED IMMEDIATELY.

MASER CONSULTING P.A.
Customer Loyalty through Client Satisfaction
www.maserconsulting.com
Engineers ■ Planners ■ Surveyors
Landscape Architects ■ Environmental Scientists
Office Locations:
■ Red Bank, NJ ■ Clinton, NJ ■ Hamilton, NJ ■ Marmora, NJ ■ Mt. Arlington, NJ ■ Mt. Laurel, NJ
■ Sterling, VA ■ Norfolk, VA ■ Albuquerque, NM ■ Albany, NY ■ Chestnut Ridge, NY ■ Newburgh, NY
■ Hawthorne, NY ■ Lehigh Valley, PA ■ Exton, PA ■ Philadelphia, PA ■ Columbia, MD ■ Tampa, FL
State of D.E. Certificate of Authorization: 2840

Copyright © 2018. Maser Consulting P.A. All Rights Reserved. This drawing and all the information contained herein is authorized for use only by the party for whom the services were contracted or to whom it is certified. This drawing may not be copied, reused, disclosed, distributed or relied upon for any other purpose without the express written consent of Maser Consulting, P.A.

verizon

CELLCO PARTNERSHIP d/b/a VERIZON WIRELESS
512 TOWNSHIP LINE ROAD
BUILDING 2, FLOOR 3
BLUE BELL, PA 19422

811 Know what's below. Call before you dig.
PROTECT YOURSELF
ALL STATES REQUIRE NOTIFICATION OF EXCAVATORS, DESIGNERS, OR ANY PERSON PREPARING TO DISTURB THE EARTH'S SURFACE ANYWHERE IN ANY STATE
FOR STATE SPECIFIC DIRECT PHONE NUMBERS VISIT: WWW.CALL811.COM

SCALE:	JOB NUMBER:
AS SHOWN	18960085A

REV	DATE	DESCRIPTION	DRAWN BY	CHECKED BY
0	11/02/18	ISSUED FOR ZONING	MEG	MPC
A	11/01/18	ISSUED FOR REVIEW	MEG	MEG

MICHAEL P. CLEARY
DELAWARE PROFESSIONAL ENGINEER - LICENSE NUMBER: 19205

IT IS A VIOLATION OF LAW FOR ANY PERSON, UNLESS THEY ARE ACTING UNDER THE DIRECTION OF THE RESPONSIBLE LICENSED PROFESSIONAL ENGINEER, TO ALTER THIS DOCUMENT.

SITE NAME:
DOV GEORGETOWN CIRCLE
335 N. RACE STREET
GEORGETOWN, DE 19947
SUSSEX COUNTY

MT. LAUREL OFFICE
2000 Midlantic Drive
Suite 100
Mt. Laurel NJ 08054
Phone: 856.797.0412
Fax: 856.722.1120
email: solutions@maserconsulting.com

SHEET TITLE: CONSTRUCTION DETAILS

SHEET NUMBER: A-8

04\DOV Georgetown Circle.ZD.Rev 0.dwg\A-8 By: MGRAUBART

PO Box 165
Fairview Village, PA 19409
Phone: 610.304.2024
Fax: 610.584.5387
info@dBmEng.com

September 25, 2018
Sue Manchel
Site Acquisition
Verizon Wireless
512 East Township Line Road
Blue Bell, PA 19422

Subject: **Electromagnetic Exposure Analysis**
"GEORGETOWN CIRCLE"
335 N. Race Street
Georgetown, DE 19947
Latitude: N 38º 41' 41.8" (NAD83)
Longitude: W 75º 23' 25.2" (NAD83)
Ground Elevation: 50.5' AMSL

Ms. Manchel:

I have received and executed your request that I perform an independent evaluation and certification of the anticipated radio-frequency exposure levels for the Verizon Wireless telecommunications facility on the structure proposed at the above referenced coordinates. The intention of this study is to verify compliance with Federal Communications Commission (hereafter "FCC") guidelines for human exposure limits to radio-frequency electromagnetic fields as per FCC Code of Federal Regulation 47 CFR 1.1307 and 1.1310. As a registered Professional Engineer, I am bound by a code of ethics to hold paramount the safety, health, and welfare of the public. All statements and calculations offered herein are made in an objective and truthful manner pursuant to that code.

Summary of Findings
The maximum exposure to radio-frequency emissions from the proposed Verizon Wireless facility will be far below FCC exposure limits. **Using upper limit assumptions for the Verizon Wireless equipment configuration, the cumulative radio-frequency exposure levels would be less than 3% of the applicable FCC standard at all locations of public access.** The following charts specifically illustrate the anticipated exposure levels in areas surrounding the facility. All exposure levels have been calculated using the methods prescribed in FCC Office of Engineering and Technology (OET) Bulletin 65 "Evaluating Compliance with FCC Guidelines for Human Exposure to Radio-frequency Electromagnetic Fields". These upper-limit conditions include maximum traffic loading, significant antenna down-tilt, maximum pattern gain, and constructive interference from ground reflection. Additionally, signal attenuation due to environmental clutter such as buildings, trees, and roadways has been ignored which will overestimate actual power densities.

Applicability of the National Telecommunications Act of 1996
This Act states that "no state or local government or instrumentality thereof may regulate the placement, construction, and modification of personal wireless service facilities on the basis of the environmental effects of radio-frequency emissions to the extent that such facilities comply with the (Federal Communications) Commission's regulations concerning such emissions". As indicated above, this proposed facility will be in full compliance with the FCC's emissions standards and as such is beyond regulation in that regard.

Technical Parameters of Consideration
The calculation results presented are based on the equipment configuration information furnished by representatives of Verizon Wireless. Specifically, for this installation, Verizon Wireless plans to install up to nine (9) panel style antennas arranged in three sectors with azimuths of 10º, 130º, and 250º in the horizontal plane with respect to true north. The antenna centerline height is planned at 100' above ground level. Transmitting through these antennas will be up to four (4) LTE channels in the 700 MHz band (per sector) at a cumulative maximum of 160 watts, up to four (4) LTE channels in the 1900 MHz band (per sector) at a cumulative maximum of 160 watts, up to four (4) LTE channels in the 850 MHz band (per sector) at a cumulative maximum of 160 watts, up to four (4) LTE channels in the 2100 MHz AWS band (per sector) at a cumulative maximum of 160 watts, and up to four (4) LTE channels in the 2100 MHz AWS-3 band (per sector) at a cumulative maximum of 160 watts.

Co-location of Other Wireless Providers
In an attempt to halt the proliferation of telecommunications structures and preserve as much of their natural landscape as possible many municipalities have adopted telecommunications ordinances that specifically require new structures to accommodate additional wireless providers from a structural standpoint. **From the standpoint of radio-frequency exposure**, the installation of the proposed Verizon Wireless equipment would in no way preclude the use of this facility by other providers.

PO Box 165
Fairview Village, PA 19409
Phone: 610.304.2024
Fax: 610.584.5387
info@dBmEng.com

Background Information

In 1985, the FCC first adopted guidelines to be used for evaluating human exposure to RF emissions. The FCC revised and updated these guidelines on August 1, 1996, as a result of a rule-making proceeding initiated in 1993. The new guidelines incorporate limits for Maximum Permissible Exposure (MPE) in terms of electric and magnetic field strength and power density for transmitters operating at frequencies between 300 kHz and 100 GHz.

The FCC's MPE limits are based on exposure limits recommended by the National Council on Radiation Protection and Measurements (NCRP) and, over a wide range of frequencies, the exposure limits were developed by the Institute of Electrical and Electronics Engineers, Inc., (IEEE) and adopted by the American National Standards Institute (ANSI) to replace the 1982 ANSI guidelines. Limits for localized absorption are based on recommendations of both ANSI/IEEE and NCRP.

The FCC's limits, and the NCRP and ANSI/IEEE limits on which they are based, are derived from exposure criteria quantified in terms of specific absorption rate (SAR). The basis for these limits is a whole-body averaged SAR threshold level of 4 watts per kilogram (4 W/kg), as averaged over the entire mass of the body, above which expert organizations have determined that potentially hazardous exposures may occur. The MPE limits are derived by incorporating safety factors that lead, in some cases, to limits that are more conservative than the limits originally adopted by the FCC in 1985. Where more conservative limits exist, they do not arise from a fundamental change in the RF safety criteria for whole-body averaged SAR, but from a precautionary desire to protect subgroups of the general population who, potentially, may be more at risk.

The FCC exposure limits are also based on data showing that the human body absorbs RF energy at some frequencies more efficiently than at others. The most restrictive limits occur in the frequency range of 30-300 MHz where whole-body absorption of RF energy by human beings is most efficient. At other frequencies, whole-body absorption is less efficient, and consequently, the MPE limits are less restrictive.

MPE limits are defined in terms of power density (units of milliwatts per centimeter squared: mW/cm^2), electric field strength (units of volts per meter: V/m) and magnetic field strength (units of amperes per meter: A/m). The far-field of a transmitting antenna is where the electric field vector (E), the magnetic field vector (H), and the direction of propagation can be considered to be all mutually orthogonal ("plane-wave" conditions).

Occupational / controlled exposure limits apply to situations in which persons are exposed as a consequence of their employment and in which those persons who are exposed have been made fully aware of the potential for exposure and can exercise control over their exposure. Occupational/controlled exposure limits also apply where exposure is of a transient nature as a result of incidental passage through a location where exposure levels

may be above general population/uncontrolled limits, as long as the exposed person has been made fully aware of the potential for exposure and can exercise control over his or her exposure by leaving the area or by some other appropriate means.

General population / uncontrolled exposure limits apply to situations in which the general public may be exposed or in which persons who are exposed as a consequence of their employment may not be made fully aware of the potential for exposure or cannot exercise control over their exposure. Therefore, members of the general public would always be considered under this category when exposure is not employment-related, for example, in the case of a telecommunications tower that exposes persons in a nearby residential area. **In the case of this study, the general population exposure limits have been applied as they are the more conservative set of standards.**

Residential Considerations

Because the antennas are being planned for installation proximate to residential uses, consideration has been given to exposure levels to residents in or on the nearby homes as illustrated below. A worst-case analysis for radiofrequency exposure to address this scenario is detailed in the second line of figure 2 on page 7. Additionally, a graphical representation of worst-case anticipated exposure at any distance from the facility is given in figure 3 for an individual on or within a three-story structure.

PO Box 165
Fairview Village, PA 19409
Phone: 610.304.2024
Fax: 610.584.5387
info@dBmEng.com

Additional Remarks

The radio-frequency emission levels from Verizon Wireless and other communications base stations are similar to that of other two-way communications systems like those used by police, fire and ambulance personnel. In contrast, commercial broadcast systems like television and radio often transmit at power levels ten times greater or more than the systems discussed above. The FCC exposure limits already include a significant margin of safety. Continuous exposure at 100% of FCC limit is considered by the scientific community to be just as safe as continuous exposure at 1% of FCC limit.

The biological effects on humans of non-ionizing radio-frequency exposure have been studied extensively now for decades. There have been thousands of reports produced by government agencies, universities, and private research groups that support the standards adopted by the FCC. **To date, there have been no credible studies conducted whose results showed evidence of any adverse health effects at the applicable FCC exposure limits.**

Sincerely,

Andrew M. Petersohn, P.E.
Registered Professional Engineer
Delaware license number 14438

ANDREW M. PETERSOHN
LICENSED
No. 14438
DELAWARE
PROFESSIONAL ENGINEER

PO Box 165
Fairview Village, PA 19409
Phone: 610.304.2024
Fax: 610.584.5387
info@dBmEng.com

dBm ENGINEERING, P.C.

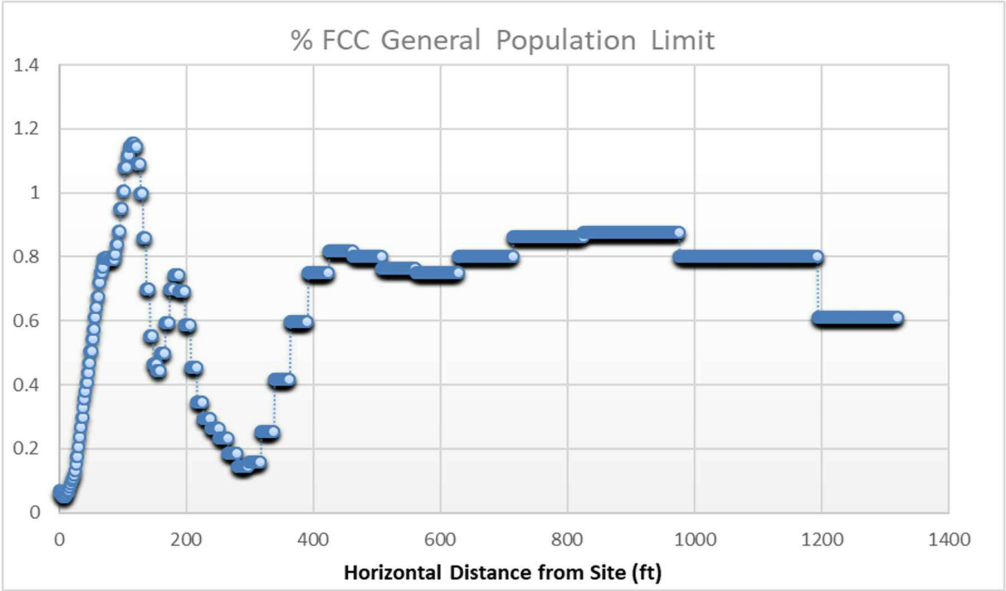

Figure-1 – calculated cumulative exposure level surrounding the proposed telecommunications facility expressed in percentage of the applicable FCC standard at ground level

PO Box 165
Fairview Village, PA 19409
Phone: 610.304.2024
Fax: 610.584.5387
info@dBmEng.com

Horizontal Distance from Facility (Ft.)	Relative Height Above Ground (Ft.)	Maximum Power Density µW/cm2 (micro-watts per square centimeter)						% of FCC Limit						Cumulative % of FCC limit across all bands
		150 MHz	700 MHz	850 MHz	1900 MHz	2100 MHz	2600 MHz	150 MHz	700 MHz	850 MHz	1900 MHz	2100 MHz	2600 MHz	
0	6	N/A	0.09	0.23	0.03	0.08	N/A	N/A	0.02	0.04	0.003	0.008	N/A	0.071
140	36	N/A	1.91	3.18	0.5	2.38	N/A	N/A	0.41	0.56	0.05	0.238	N/A	1.258
300	6	N/A	0.7	0.06	0.04	0.02	N/A	N/A	0.15	0.01	0.004	0.002	N/A	0.166
600	6	N/A	2.19	1.47	0.14	0.11	N/A	N/A	0.47	0.26	0.014	0.011	N/A	0.755
1320 (1/4 mi.)	6	N/A	0.75	0.68	1.01	2.38	N/A	N/A	0.16	0.12	0.101	0.238	N/A	0.619
FCC Exposure Limits for General Population		300 µW/cm²	467 µW/cm²	567 µW/cm²	1000 µW/cm²	1000 µW/cm²	1000 µW/cm²							

Figure-2 – sample calculated exposure levels near the proposed telecommunications facility

PO Box 165
Fairview Village, PA 19409
Phone: 610.304.2024
Fax: 610.584.5387
info@dBmEng.com

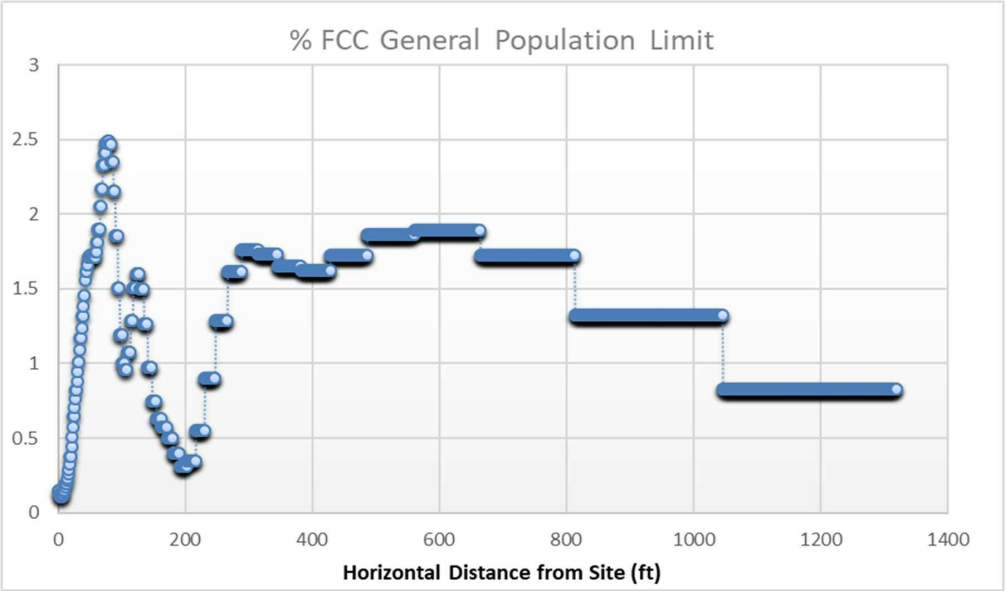

Figure-3 – calculated cumulative exposure level surrounding the proposed telecommunications facility expressed in percentage of the applicable FCC standard at 36 feet above ground level

PO Box 165
Fairview Village, PA 19409
Phone: 610.304.2024
Fax: 610.584.5387
info@dBmEng.com

DECLARATION OF ENGINEER

Andrew M. Petersohn, P.E., hereby states that he is a graduate telecommunications consulting engineer possessing Master and Bachelor Degrees in Electrical Engineering from Lehigh University (2005 and 1999, respectively). His corporation, dBm Engineering, P.C., has been retained by representatives of Verizon Wireless to perform an electromagnetic emissions analysis for a proposed telecommunications facility.

Mr. Petersohn also asserts that the calculations and/or measurements described in this report were made personally and in a truthful and objective manner. Mr. Petersohn is a Registered Professional Engineer licensed in Pennsylvania, Delaware, Maryland, Virginia, New York, Florida and New Jersey. He has over two decades of engineering experience in the field of wireless communications. Mr. Petersohn is an active member of the National Society of Professional Engineers (NSPE) and the Pennsylvania Society of Professional Engineers (PSPE). Mr. Petersohn further states that all facts and statements contained in the foregoing document are true and accurate to the best of his knowledge. He believes, under penalty of perjury, the foregoing to be correct.

Andrew M. Petersohn, P.E.
Registered Professional Engineer
Delaware license number 14438

ANDREW M. PETERSOHN
No. 14438
DELAWARE
PROFESSIONAL ENGINEER

Executed this the 25th day of September, 2018.

PO Box 165
Fairview Village, PA 19409
Phone: 610.304.2024
Fax: 610.584.5387
info@dBmEng.com

dBm ENGINEERING, P.C.

PO Box 165
Fairview Village, PA 19409
Phone: 610.304.2024
Fax: 610.584.5387
info@dBmEng.com

dBm ENGINEERING, P.C.

September 25, 2018
Sue Manchel
Site Acquisition
Verizon Wireless
512 East Township Line Road
Blue Bell, PA 19422

Subject: **Interference Analysis**
Proposed Telecommunications Facility:
"GEORGETOWN CIRCLE"
335 N. Race Street
Georgetown, DE 19947
Latitude: N 38º 41' 41.8" (NAD83)
Longitude: W 75º 23' 25.2" (NAD83)
Ground Elevation: 50.5' AMSL

Ms. Manchel:

I have received and executed the request that I perform an independent evaluation of the potential for harmful interference generated by the proposed Verizon Wireless telecommunications facility at the location referenced above. The intention of this study is to determine if the manifestation of harmful interference is a viable concern through the close examination of the radio frequency (hereafter RF) parameters of the installation. As a registered professional engineer, I am bound by a code of ethics to hold paramount the safety, health, and welfare of the public. All statements and calculations offered herein are made in an objective and truthful manner pursuant to that code.

Summary of Findings
After close examination of the details of this proposal, it is my professional opinion that **no potential exists for the manifestation of harmful interference** as a result of the proposed Verizon Wireless telecommunications facility. My findings indicate that Verizon Wireless will be operating in full compliance with all applicable standards as outlined in their Federal Communications Commission licensure.

Sincerely,

Andrew M. Petersohn, P.E.
Registered Professional Engineer
Delaware license number 14438

ANDREW M. PETERSOHN
LICENSE
No. 14438
DELAWARE
PROFESSIONAL ENGINEER

Licensure Discussion

Verizon Wireless is bound by its Federal Communications Commission (hereafter FCC) licensure to transmit only the specific frequencies and power levels for which they are licensed. In Sussex County, Delaware these licenses include the 'B' Cellular Band, the 'E' and 'F' PCS band, the 'A', 'B', and 'J' AWS bands, and the upper 'C' 700 MHz band. Other communication facilities and services such as emergency responders, television broadcasting, AM/FM broadcasting, mobile to mobile radios, and home electronics operate at different frequencies, once again, allocated by the FCC. For this reason, the manifestation of **direct**, harmful interference is precluded by virtue of Verizon Wireless being the only entity licensed to utilize these specifically defined portions of the RF spectrum. As such, there will be no direct, significant radio frequency emissions that fall into any band other than that for which Verizon Wireless is licensed. However, when non-linear elements (such as amplifiers) are introduced in the RF path the possibility exists for **indirect** interference caused by harmonic and inter-modulated frequency emissions that may fall outside the licensed spectrum. Due to the fact that the harmonic and inter-modulated output of Cellular and PCS transmitters is extremely low (as required by FCC type approval), this only becomes a concern when there are multiple telecommunication installations in close proximity to one another. This problem is easily avoided by insuring adequate vertical separation (roughly 10') when service providers co-locate on a structure. In this specific installation, the point is moot as Verizon is the only service provider currently proposing use of the tower. **In the unlikely event that future radio frequency interference is reported, it is Verizon Wireless policy to identify and mitigate any interference issues as quickly as possible.**

Facility Discussion

According to the information supplied by representatives of Verizon Wireless the proposed design for this facility includes a total of nine (9) panel style antennas arranged in three sectors with azimuths of 10º, 130º, and 250º in the horizontal plane with respect to true north. The antenna centerline height is planned at 100' above ground level. Transmitting through these antennas will be up to four (4) LTE channels in the 700 MHz band (per sector) at a cumulative maximum of 160 watts, up to four (4) LTE channels in the 1900 MHz band (per sector) at a cumulative maximum of 160 watts, up to four (4) LTE channels in the 850 MHz band (per sector) at a cumulative maximum of 160 watts, up to four (4) LTE channels in the 2100 MHz AWS band (per sector) at a cumulative maximum of 160 watts, and up to four (4) LTE channels in the 2100 MHz AWS-3 band (per sector) at a cumulative maximum of 160 watts.

Additional Remarks

The radio frequency emission levels from Verizon Wireless and other PCS and Cellular communications base stations are similar to that of other two-way communications systems such as those used by police, fire and ambulance personnel. In contrast, commercial broadcast systems such as television and radio often transmit at power levels ten times greater or more than the systems discussed above. Due to the relatively low power output, the potential for harmful interference is greatly reduced as the harmonic and inter-modulated emissions are typically in the noise floor of most receivers when only a few hundred feet away.

PO Box 165
Fairview Village, PA 19409
Phone: 610.304.2024
Fax: 610.584.5387
info@dBmEng.com

DECLARATION OF ENGINEER

Andrew M. Petersohn, P.E., hereby states that he is a graduate telecommunications consulting engineer possessing Master and Bachelor Degrees in Electrical Engineering from Lehigh University (2005 and 1999, respectively). His corporation, dBm Engineering, P.C., has been retained by representatives of Verizon Wireless to perform an interference analysis for a proposed telecommunications facility.

Mr. Petersohn also asserts that the calculations and/or measurements described in this report were made personally and in a truthful and objective manner. Mr. Petersohn is a Registered Professional Engineer licensed in Pennsylvania, Delaware, Maryland, Virginia, New York, Florida and New Jersey. He has over two decades of engineering experience in the field of wireless communications. Mr. Petersohn is an active member of the National Society of Professional Engineers (NSPE) and the Pennsylvania Society of Professional Engineers (PSPE). Mr. Petersohn further states that all facts and statements contained in the foregoing document are true and accurate to the best of his knowledge. He believes, under penalty of perjury, the foregoing to be correct.

Andrew M. Petersohn, P.E.
Registered Professional Engineer
Delaware license number 14438

ANDREW M. PETERSOHN
No. 14438
DELAWARE
PROFESSIONAL ENGINEER

Executed this the 25th day of September, 2018

PO Box 165
Fairview Village, PA 19409
Phone: 610.304.2024
Fax: 610.584.5387
info@dBmEng.com

dBm ENGINEERING, P.C.

PO Box 165
Fairview Village, PA 19409
Phone: 610.304.2024
Fax: 610.584.5387
info@dBmEng.com

dBm ENGINEERING, P.C.

October 4, 2018
Sue Manchel
Site Acquisition
Verizon Wireless
512 East Township Line Road
Blue Bell, PA 19422

Subject: **Radio Frequency Design Analysis**
"GEORGETOWN CIRCLE"
335 N. Race Street
Georgetown, DE 19947
Latitude: N 38º 41' 41.8" (NAD83)
Longitude: W 75º 23' 25.2" (NAD83)
Ground Elevation: 50.5' AMSL

Ms. Manchel:

I have received and executed the request that I perform an independent evaluation and design review for the Verizon Wireless telecommunications facility proposed at the above referenced coordinates. The intention of this study is to provide an objective, professional opinion regarding the proposed facility from a Radio Frequency design perspective. Specifically, how the site compliments the existing network and what service objectives it fulfills. As a registered Professional Engineer, I am bound by a code of ethics to hold paramount the safety, health, and welfare of the public. All statements and calculations offered herein are made in an objective and truthful manner pursuant to that code.

Summary of Findings
In my professional opinion, the proposed facility is extremely well suited to provide enhanced wireless service to the areas of Georgetown targeted for service improvement. The proposed facility is the only feasible alternative that will satisfy the design objective of this search ring. The design, location, and proposed antenna height are the least intrusive means of providing improved service for Verizon Wireless subscribers in the targeted area. The proposed antenna height is the absolute minimum acceptable to achieve a high percentage of the site's design goals.

Sincerely,

ANDREW M. PETERSOHN
LICENSE
No. 14438
DELAWARE
PROFESSIONAL ENGINEER

Andrew M. Petersohn, P.E.
Registered Professional Engineer
Delaware license number 14438

The Verizon Wireless facilities currently serving this portion of Georgetown have reached their data capacity upper-limit "ceiling". Spurred on by smart-phones, tablets, data cards, and the various applications and content available, an exponential growth in data use over the past decade has left providers, equipment manufacturers, and the FCC looking for solutions and radio spectrum to address the demand. As illustrated below, Cisco has recently predicted a 47% compound annual growth rate for global mobile data traffic between 2016 and 2021 resulting in an anticipated seven (7) fold increase in traffic during that time frame. Because Verizon Wireless can only broadcast and receive in the bands for which they are licensed, there is a finite amount of data throughput that can be supported even using the most modern equipment offered by base-station manufacturers. The traffic demand in the area has already begun to overrun the available resources particularly during peak times of day. Without proper action, the data growth trend will result in a significant degradation in customer experience including services that affect public safety.

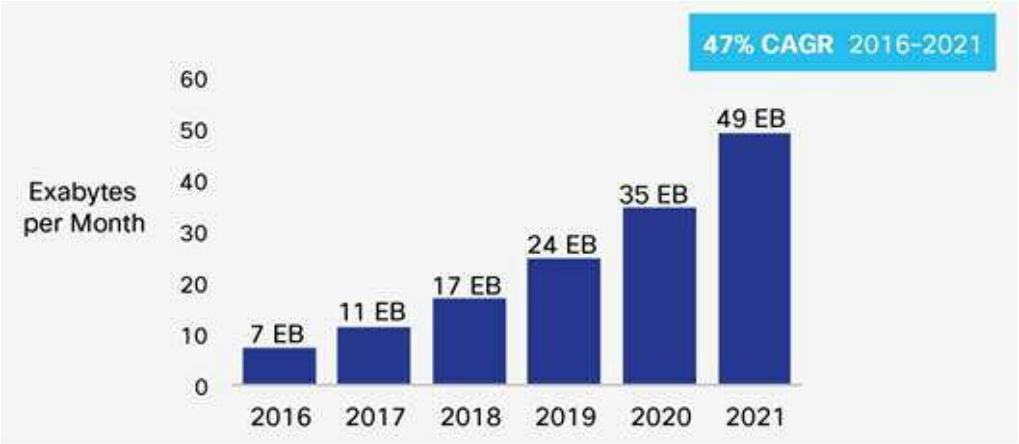

PO Box 165
Fairview Village, PA 19409
Phone: 610.304.2024
Fax: 610.584.5387
info@dBmEng.com

Existing Verizon Wireless Coverage

Currently, Verizon has five (5) macro sites in the area immediately surrounding the proposed facility. These sites would be the first-tier neighbors for the proposed facility and have sectors that currently serve into this part of Georgetown that is capacity exhausted thus requiring immediate traffic offloading. Specifically, the southeasterly facing sector of the "Georgetown" site will be effectively offloaded by the proposed facility.

Cell Name	Structure Type	Center Line (feet)	Street Address
GEORGETOWN	Lattice	148	512 North Dupont Hwy
COKESBURY	Lattice	159	14908 Cokesbury Road
HARBESON	Lattice	130	Rt 5 South (Main Street)
ZOAR BELLA	Monopole	145	24296 Lawson Road
WHALEYS CORNER	Monopole	145	24387 East Trap Pond Road

The best server coverage from the above facilities is illustrated below in figure 1. Highlighted with a green ring are the areas of inadequate capacity that define the improvement objectives for this search ring. Specifically, these areas include the Georgetown Circle and areas due south.

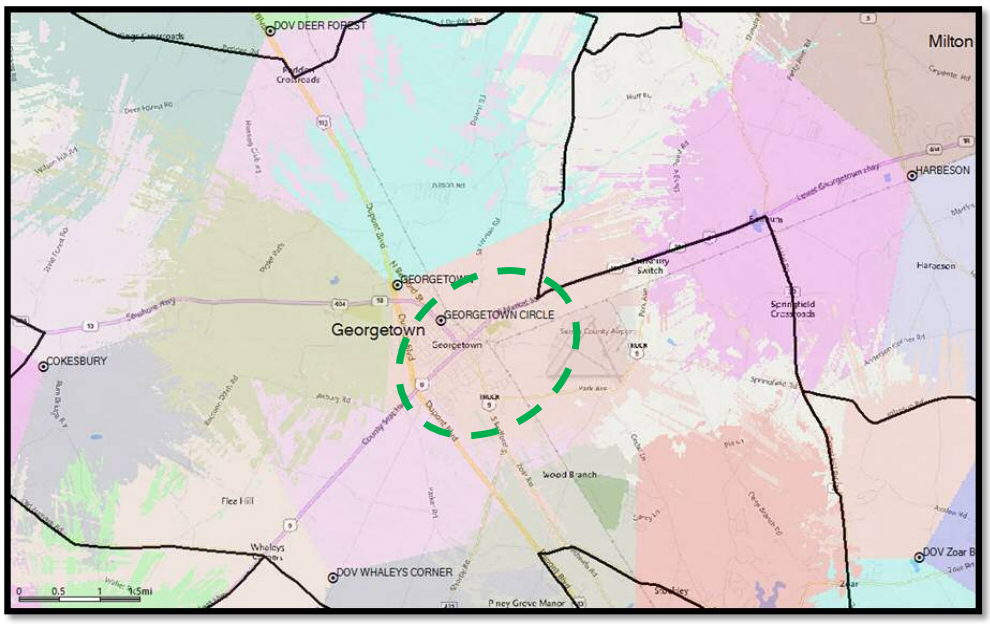

Figure 1 – Existing Best Server Coverage

PO Box 165
Fairview Village, PA 19409
Phone: 610.304.2024
Fax: 610.584.5387
info@dBmEng.com

Proposed Verizon Wireless Capacity Upgrade

The existing sites detailed above are currently under-serving the targeted areas of Georgetown from a capacity perspective. Experience dictates that to effectively provide adequate service in a capacity starved area, a telecommunications facility must be located as close to the subscriber density as possible. Following this tenet ensures the two most important design criteria for this environment are met: First, that there is a single dominant facility that serves as much of the area as possible and second that there is adequate signal strength to penetrate the often-dense building materials typically found in an area of high subscriber density. As illustrated by the proposed site's dominant service area (figure 2 below), the new facility will provide an effective capacity offload while providing improved in-building coverage to the general area. Verizon Wireless mobile devices in the newly shaded coverage areas will be served by the proposed facility when engaged in data-activity allowing the facility to reduce the data traffic load on the nearby sites. Any decrease in the height of the proposed facility will decrease the offload area and diminish the effectiveness of the proposed site.

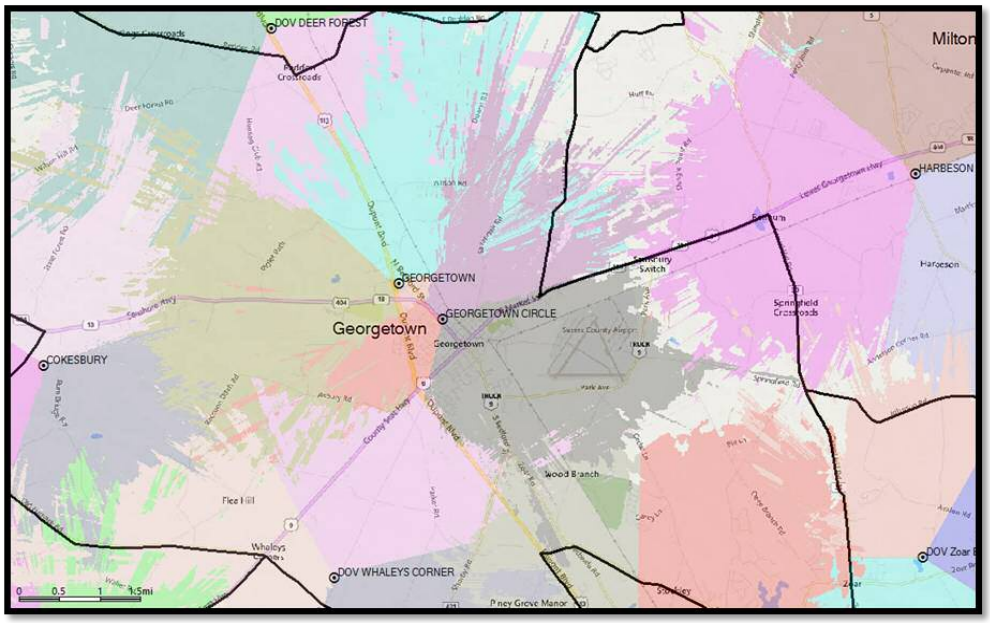

Figure 2 – Proposed Coverage

PO Box 165
Fairview Village, PA 19409
Phone: 610.304.2024
Fax: 610.584.5387
info@dBmEng.com

Reliable Service

The term "reliable" is used to describe areas where a Verizon Wireless subscriber has the ability to place, receive, and maintain a phone call. Additionally, the concept of reliable service extends beyond just voice communication; access to the data network with a high probability of success and adequate throughput is now a pre-requisite to reliable service. Without adequate capacity, there cannot be reliable service as users attempting to access the network through an overburdened facility will be rejected until such time that resources become available. When the network is not dimensioned properly, delays in network availability become as detrimental to the user experience as coverage gaps as both will result in a denial of service to the customer. Reliable service provided from a facility is affected by many factors including surrounding topography, clutter types, foliage, and subscriber loading during the site's hour of heaviest use, its "busy hour". Because the network must maintain reliability under all conditions, these factors are taken into consideration when designing a new facility. Currently, busy hour exhaustion of the sites serving the area targeted for improvement represents a potential for voice and data service interruptions that may impact public safety. If left unaddressed, the busy hour exhaustion will become increasingly prevalent as subscriber demand continues to increase resulting in exhaustion for greater periods of the day. Eventually, the network resources in the area will be in a state of chronic exhaustion with subscribers consistently experiencing call blocks, data session rejections, and unacceptable data throughput rates. This includes 911 emergency calls and public safety related data requests such as an officer's ability to process a license plate or driving record during a traffic stop.

Wireless Substitution

According to the CDC[1] greater than one-half of American homes (53.9%) had only wireless telephones (also known as cellular telephones, cell phones, or mobile phones) during the second half of 2017. This represents an increase of over three percentage points since the second half of 2016. Roughly three in four adults aged 25–29 (75.6%) and aged 30-34 (73.3%) lived in households with only wireless telephones. As wireless substitution continues to spread, availability of in-building wireless service, both data and voice, becomes increasingly important.

Emergency Services Implications

Wireless devices are widely used by municipal emergency services for voice and data services including those that impact public safety. Additionally enhanced 911 (E911) services, which allow a mobile caller to be located by the dispatch center, are dependent on an adequate service level to provide help in an emergency. It is estimated that approximately 70% of 911 calls originate from mobile devices[2]. In the service

[1] http://www.cdc.gov/nchs/data/nhis/earlyrelease/wireless201806.pdf
[2] https://transition.fcc.gov/cgb/consumerfacts/wireless911srvc.pdf

PO Box 165
Fairview Village, PA 19409
Phone: 610.304.2024
Fax: 610.584.5387
info@dBmEng.com

challenged areas, an unreliable level of wireless service could, in many cases, negatively affect the ability of an individual in need of emergency services who is dialing 911.

Technical Parameters of Consideration

The calculation results presented are based on the equipment configuration information furnished by representatives of Verizon Wireless. Specifically, for this installation, Verizon Wireless plans to install up to nine (9) panel style antennas arranged in three sectors with azimuths of 10º, 130º, and 250º in the horizontal plane with respect to true north. The antenna centerline height is planned at 100' above ground level. Transmitting through these antennas will be up to four (4) LTE channels in the 700 MHz band (per sector) at a cumulative maximum of 160 watts, up to four (4) LTE channels in the 1900 MHz band (per sector) at a cumulative maximum of 160 watts, up to four (4) LTE channels in the 850 MHz band (per sector) at a cumulative maximum of 160 watts, up to four (4) LTE channels in the 2100 MHz AWS band (per sector) at a cumulative maximum of 160 watts, and up to four (4) LTE channels in the 2100 MHz AWS-3 band (per sector) at a cumulative maximum of 160 watts.

PO Box 165
Fairview Village, PA 19409
Phone: 610.304.2024
Fax: 610.584.5387
info@dBmEng.com

DECLARATION OF ENGINEER

Andrew M. Petersohn, P.E., hereby states that he is a graduate telecommunications consulting engineer possessing Master and Bachelor Degrees in Electrical Engineering from Lehigh University (2005 and 1999, respectively). His corporation, dBm Engineering, P.C., has been retained by representatives of Verizon Wireless to perform a radio frequency design analysis for a proposed telecommunications facility.

Mr. Petersohn also asserts that the calculations and/or measurements described in this report were made personally and in a truthful and objective manner. Mr. Petersohn is a Registered Professional Engineer licensed in Pennsylvania, Delaware, Maryland, Virginia, New York, Florida and New Jersey. He has over two decades of engineering experience in the field of wireless communications. Mr. Petersohn is an active member of the National Society of Professional Engineers (NSPE) and the Pennsylvania Society of Professional Engineers (PSPE). Mr. Petersohn further states that all facts and statements contained in the foregoing document are true and accurate to the best of his knowledge. He believes, under penalty of perjury, the foregoing to be correct.

Andrew M. Petersohn, P.E.
Registered Professional Engineer
Delaware license number 14438

ANDREW M. PETERSOHN
No. 14438
DELAWARE
PROFESSIONAL ENGINEER

Executed this the 4th day of October, 2018

PO Box 165
Fairview Village, PA 19409
Phone: 610.304.2024
Fax: 610.584.5387
info@dBmEng.com

dBm ENGINEERING, P.C.

TOWN OF GEORGETOWN

MAYOR
AND
COUNCIL

TOWN HALL
39 THE CIRCLE
GEORGETOWN, DE
19947

November 5, 2018

Dear Property Owner:

Notice is hereby given that the **TOWN COUNCIL** of the Town of Georgetown will receive a presentation from Wireless Access Technologies, Inc., on **Wednesday, November 14, 2018** at First State Community Action, 308 North Railroad Avenue, Georgetown, DE beginning at **7:00 p.m.** with regard to the following request:

CASE #2018-23 **Verizon Tower 335NRA**

Installation of a 108-foot cellular tower on Town of Georgetown property located at
335 North Race Street, to the rear of the Georgetown Police Department.
Further identified as Sussex County Tax Map ID 135-14.20-97.00

Information regarding this project is available for public inspection in the Town Administrative Office during the hours of 8:00 a.m. – 4:30 p.m., Monday through Friday. All interested parties are invited to attend. Persons with disabilities requiring special accommodations to attend this meeting should contact the Town Office 72 hours in advance of the meeting, stating their needs, in order to have them addressed under the requirements of the American with Disabilities Act (ADA).

Should you have any questions, please feel free to contact me directly at (302) 856-7391.

Sincerely,

TOWN OF GEORGETOWN
Eugene S. Dvornick, Jr.
Eugene S. Dvornick, Jr.
Town Manager

ORDINANCE 2018-04

AN ORDINANCE TO AMEND THE CODE OF THE TOWN OF GEORGETOWN, CHAPTER 157 THEREOF, ENTITLED PEACE AND GOOD ORDER

THE TOWN COUNCIL OF THE TOWN OF GEORGETOWN IN COUNCIL MET AND HEREBY ORDAINS:

Section 1. Chapter 157, Peace and Good Order by adding the following:

Article V. Camping

§ 157-12. Purpose.

The streets and public property within the Town should be unobstructed, readily accessible and available to residents and the public at large. The use of these areas for camping purposes or storage of personal property interferes with the rights of others to make use of these areas for their proper function. Such activity can constitute a public health and safety hazard that adversely impacts private and commercial property and the general welfare of the Town. Camping on private property without the consent of the owner, or at any time without proper sanitary measures and for other than a minimal duration adversely affects property rights as well as the public health, safety, and welfare. The purpose of this chapter is to maintain streets, parks and other public and private property within the Town in a clean, sanitary and accessible condition and to adequately protect the health, safety and public welfare of the community.

§ 157-13. Definitions.

A. "Camp" or "setting up campsite" means to, at any time, establish or maintain outdoors or in, on or under any vehicle or structure not intended for human habitation, a temporary or permanent place for cooking or sleeping, by setting up any bedding, including, but not limited to, a sleeping bag, blanket, mattress, tent, hammock or other sleeping equipment or by setting up any cooking equipment with the intent to use that location for habitation.

B. "Camp facilities" means structures, equipment or vehicles used for camping, including, but not limited to, tents, huts, temporary shelters, trailers or vehicles, if the vehicle is being used for habitation.

DRAFT

C. "Camp paraphernalia" means implements and equipment used while camping including, but not limited to, tarpaulins, cots, beds, sleeping bags, blankets, mattresses, hammocks, operational cooking facilities, and similar equipment.

D. "Campsite" includes any location used for the purposes of camping.

E. "Habitation" means the intentional use of a space as temporary or permanent living quarters.

F. "Store" means to put aside or accumulate for use when needed, to put for safekeeping or to place or leave in a location.

§ 157-14. Unlawful camping.

A. No person shall camp anywhere in the Town of Georgetown, whether on public or private property, except as hereinafter expressly permitted in this chapter.

B. It shall be an affirmative defense under this Chapter for any person, without the purpose of habitation, to temporarily occupy and use a vehicle for emergency reasons such as escape from or avoidance of an abusive person(s), avoidance of driving a vehicle while under the influence of alcohol or drugs, even though the person may sleep during the period of that use. For purposes of this section, "temporarily occupy" means a duration of twelve hours or less.

C. Camping, whether or not otherwise permitted under this chapter, shall not be permitted be conducted in such a manner as to create noise, inadequate sanitation, or in any manner that poses a danger to the health, safety and general welfare of public or private property; nor where the activity would be prohibited under any other provision of this code.

§ 157-15. Permitted camping.

Camping is permitted in the Town of Georgetown only under the following circumstances:

A. On public property specifically set aside and clearly marked for public camping purposes.

B. In conjunction with events authorized and expressly provided for in a special event permit issued by the Town of Georgetown. To ensure fair and consistent application of this section, the Town Manager or designee may promulgate guidelines defining the criteria for permit issuance contained in this section.

C. In motor homes or travel trailers designed and equipped for habitation while on designated areas on public or private property in conjunction with community or sporting events in which one or more of the occupants is a participant in or organizer of the event. Camping in connection with a community or sporting event shall not exceed three consecutive nights and only in areas approved by the Town Manager or

DRAFT

designee. The Town Manager may promulgate guidelines for designated parking areas for such events.

D. In the rear or side yard of a residence with the consent of the owner or occupant of the residence. Camping in the rear or side yard is only permitted if the campsite is separated from the street by a fence, hedge or other permanent obstruction. Camping shall be limited to no more than three (3) days.

E. Overnight camping in connection with Town or government sponsored programs.

§ 157-16. Storage of personal property in public places.

It shall be unlawful for any person to store or leave unattended camp facilities or camp paraphernalia on public property, unless such storage is expressly authorized and in conjunction with a permitted camping activity under this chapter.

§ 157-17. Public nuisance declared.

Any campsite established in the Town in violation of this Article is declared to be a public nuisance, and the Town Manager, or designee, is authorized to abate the nuisance and remove camp facilities and camp paraphernalia as authorized by law.

§ 157-18. Applications of covenants, conventions and restrictions (CCRs).

Nothing in this chapter is intended to preempt CCRs on private property that are more restrictive than the provisions of this chapter.

§ 157-19. Penalty.

Any person who violates any provision in this Article shall pay such fines as set out in Chapter 1, Article III, General Penalty.

Section 2. This Ordinance shall become effective following its adoption by a majority vote of all members elected to the Town Council.

BE IT ENACTED by the Town Council of the Town of Georgetown, Delaware on the _____day of _____ A.D., 2018.

_____
William E. West, Mayor

_____
Robert L. Holston, Jr., Secretary

DRAFT

Synopsis

This regulates camping within the Town of Georgetown.

1st Reading: November 14, 2018

2nd Reading: December 12, 2018

Adoption: December 12, 2018

DRAFT

ORDINANCE 2018-05

AN ORDINANCE TO AMEND THE CODE OF THE TOWN OF GEORGETOWN, CHAPTER 176 THEREOF, ENTITLED SEWERS AND CHAPTER 222 THEREOF, ENTITLED WATER

THE TOWN COUNCIL OF THE TOWN OF GEORGETOWN IN COUNCIL MET AND HEREBY ORDAINS:

Section 1. Chapter 176, Article VII, § 176-48 Assessment of impact fees, A. as follows:

A. Impact fees shall be assessed as outlined below:

Type of Structure	Assessment
1~~A~~. Any single-family residential dwelling with one kitchen and one or more baths	1.0 EDU
2~~B~~. Any multifamily residential dwelling with one kitchen and one or more baths (per unit)	~~1.0 EDU~~
a) Unit with one (1) bedroom	**0.75 EDU**
b) Unit with two (2) bedrooms	**0.80 EDU**
c) Unit with three (3) bedrooms	**1.0 EDU**
3~~C~~. Any commercial, institutional or industrial structure	~~Based on water consumption or sewer metering Min. 1 EDU~~ **Per Chapter 176, Attachment 1**

B. The number of EDU's for structures under category **3**~~C~~ shall be estimated by the Town Engineer in accordance with **published flow data.** ~~attached table.~~ After one year of operation, **said** ~~each~~ structure**s** ~~with water usage in excess of 2,500 gpd~~ shall be ~~re-~~evaluated and the number of EDU's recalculated based on the following formula:

Sewage flow per year in gallons **@** ~~÷/.~~ (production days x 225 gal/day/EDU)

C. Results will be rounded up to full number.

D. The impact fee adjustment shall be billed or refunded at the time of the next regularly scheduled billing.

DRAFT

Section 2. Chapter 222, Article VIII, § 222-23 Water impact fees, D. as follows:

D. Assessment of impact fee.

(1) Impact fees shall be assessed as outlined below:

Category	Type of Structure	Assessment
A.	Any single-family residential dwelling with 1 kitchen and 1 or more baths	1.0 EDU
B.	Any multifamily residential dwelling with 1 kitchen and 1 or more baths (per unit)	~~1.0 EDU~~
	1) Unit with one (1) bedroom	**0.75 EDU**
	2) Unit with two (2) bedrooms	**0.80 EDU**
	3) Unit with three (3) bedrooms	**1.0 EDU**
C.	Any commercial, institutional or industrial structure	Per Chapter 176, Attachment 1

(2) The number of EDU's for structures under Category C shall be estimated by the Town Engineer in accordance with published flow data. After one year of operation, said structures shall be evaluated and the number of EDU's recalculated based on the following formula:

Water flow per year in gallons @ (production days x 225 gal/day/EDU)

(3) Results will be rounded up to full number.

(4) The impact fee adjustment shall be billed or refunded at the time of the next regularly scheduled billing.

Section 3. This Ordinance shall become effective following its adoption by a majority vote of all members elected to the Town Council.

BE IT ENACTED by the Town Council of the Town of Georgetown, Delaware on the _____day of _____ A.D., 2018.

_____
William E. West, Mayor

_____

DRAFT

Robert L. Holston, Jr., Secretary

Synopsis

This establishes the Equivalent Dwelling Unit (EDU) factoring for multi-family (apartment) units.

1st Reading: November 14, 2018

2nd Reading: December 12, 2018

Adoption: December 12, 2018

DRAFT

Preliminary Land Use Service (PLUS) Application
Pre-Update Review Request
Municipal Comprehensive Plans
Comprehensive Plan Amendments
Municipal Ordinances
Delaware Office of State Planning Coordination

122 Martin Luther King Jr. Blvd., South • Dover, DE 19901 • Phone: 302-739-3090 • Fax: 302-739-5661

All sections related to your project must be completed. Incomplete applications could lead to delays in scheduling your review. If you need assistance or clarification, please call the State Planning Office at (302) 739-3090.

REQUESTED REVIEW: Check one

Comprehensive Plan Pre-Update Review **Complete Sections 1 and 3 only**	
Comprehensive Plan or Update **Complete Sections 1 and 3 only**	
Comprehensive Plan Amendment **Complete Sections 1 and 2 only**	X
Municipal Ordinance Review **Complete Sections 1 and 2 only**	

Date of most recently certified comprehensive plan: 1/13/2010

Link to most recently certified comprehensive plan, if available:
If a link to the plan is not available, you must submit a copy of your plan with this application for a Pre-Update Review or a Comprehensive Plan Amendment.

https://imageserv11.team-logic.com/mediaLibrary/286/2013_Updated_Geo_Com_Plan

Preliminary Land Use Service (PLUS) Application
Pre-Update Review Request
Municipal Comprehensive Plans
Comprehensive Plan Amendments
Municipal Ordinances
Delaware Office of State Planning Coordination
122 Martin Luther King Jr. Blvd., South • Dover, DE 19901 • Phone: 302-739-3090 • Fax: 302-739-5661

SECTION 1: MUNICIPAL INFORMATION

Name of Municipality: Town of Georgetown	
Address: 37 The Circle Georgetown, DE 19947	**Contact Person:** Jocelyn Godwin
	Phone Number: (302)856-7391
	Fax Number: (302)856-7336
	E-mail Address: jgodwin@georgetowndel.com

Application prepared by: Same	
Address:	**Contact Person:**
	Phone Number:
	Fax Number:
	E-mail Address:

Preliminary Land Use Service (PLUS) Application
Pre-Update Review Request
Municipal Comprehensive Plans
Comprehensive Plan Amendments
Municipal Ordinances
Delaware Office of State Planning Coordination
122 Martin Luther King Jr. Blvd., South • Dover, DE 19901 • Phone: 302-739-3090 • Fax: 302-739-5661

SECTION 2. COMPREHENSIVE PLAN AMENDMENT OR MUNICIPAL ORDINANCE DESCRIPTION

Please describe the submission.

The Town of Georgetown is requesting an amendment to their Comprehensive Plan Map for future land use. The Tax Parcel ID #135-14.00-35.00 to be addressed is owned by Sussex Entertainment Enterprises, LLC and is zoned Highway Commercial (HC). The Comprehensive Plan Map reflects the future land use as Commercial.

A project was originally submitted in 2006 (PLUS #2006-09-10) to annex two adjoining parcels and to include a portion of the subject parcel into a Residential Planned Community (RPC) with a base zoning of Multifamily Residential (MR1). Initial advertising in 2006 for meetings regarding the requested zoning included the subject parcel. An official subdivision to create the portion of the parcel for the rezoning was never completed by the applicant; therefore, the parcel was not included in the Town's ordinance designating the zoning of the adjoining parcels. The Comprehensive Plan Map now needs to reflect the future land use of Medium High Density Residential, to allow the owner to apply for a zoning amendment, to Multifamily Residential.

Once the zoning on the parcel has been corrected, the owner would like to proceed with their concept plan for residential development.

Exhibit 1 – Town of Georgetown Comprehensive Plan Rev 8-28-18

Exhibit 2 – Town of Georgetown Comprehensive Plan Rev 8-28-18 Zoom

SECTION 3. CHECKLIST FOR PRE-PLAN-UPDATE REVIEWS, COMPREHENSIVE PLANS AND COMPREHENSIVE PLAN UPDATES

Please indicate the section and page number where the following information can be found in the comprehensive plan. For additional details on this checklist, go to the following website: http://stateplanning.delaware.gov/docs/comprehensive-plan-checklist-guide.pdf

Comprehensive Plan Requirements for ALL Communities	
Elements of Delaware Code	***Page #s / Section***
Position on Population Growth	
Position on Housing Growth	
Position on Expansion of Boundaries	
Position on Development of Adjacent Areas	
Position on Redevelopment Potential	
Position on Community Character	
Position on the General Use of Land	
Position on Critical Community Development Issues	
Position on Key Infrastructure Issues	
Demonstrate coordination with State, County and other Municipalities	
Additional Elements of the Comprehensive Plan Required for Communities with more than 2,000 persons	
Elements of Delaware Code	***Page #s / Section***
Description of Physical, Demographic and Economic Conditions	
Policies, Statements, Goals and Planning Components for Public and Private Uses of Land	
Policies, Statements, Goals and Planning Components for Transportation	
Policies, Statements, Goals and Planning Components for Economic Development	
Policies, Statements, Goals and Planning Components for Affordable Housing	
Policies, Statements, Goals and Planning Components for Community Facilities	
Policies, Statements, Goals and Planning Components for Open Space and Recreation	

Policies, Statements, Goals and Planning Components for Protection of Sensitive Areas	
Policies, Statements, Goals and Planning Components for Community Design	
Policies, Statements, Goals and Planning Components for Adequate Water and Waste Water Systems	
Policies, Statements, Goals and Planning Components for Protection of Historical and Cultural Resources	
Policies, Statements, Goals and Planning Components for Annexation	
Policies, Statements, Goals and Planning Components for other Elements which in the opinion of the community best promotes health, safety prosperity and general public welfare.	
Sourcewater Protection (7 Del. C. § 6083)	
Other Code Requirements Linked to the Comprehensive Plan	
Elements of Delaware Code	***Page #s / Section***
Municipal Boundaries accurately depicted on maps, and recorded in county if applicable (City / Town Charters). Required for all municipalities.	

Other elements	
Public Participation	

Additional comments:

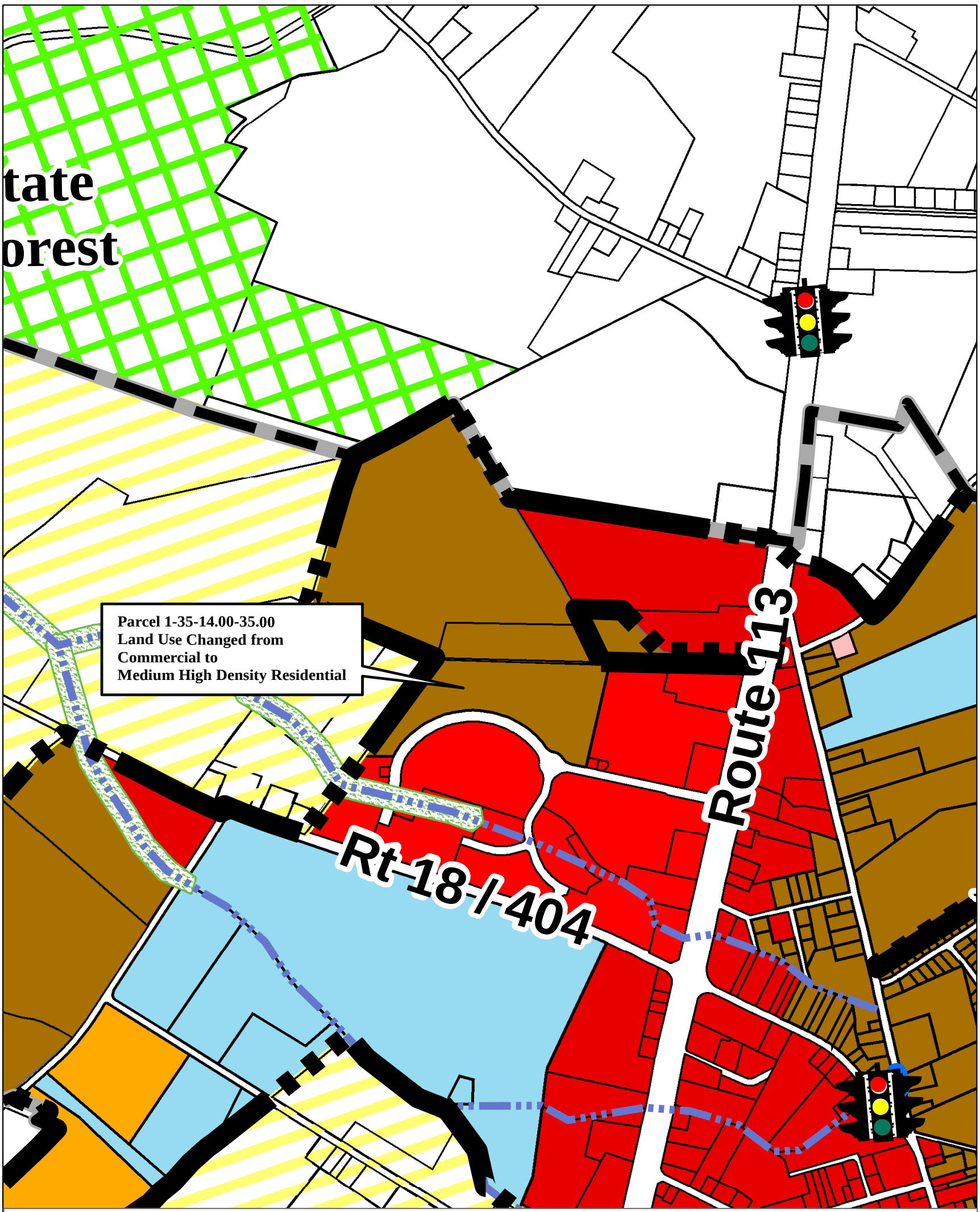

As Adopted by Town Council on January 13, 2010;
Revision Adopted November 13, 2013.
Revision August 28, 2018.

Town of Georgetown Comprehensive Plan

- Education and Community Facilities
- Existing Golf Courses & Private Recreation Site
- Commercial
- Commercial / Medium - High Density Residential
- Limited Commercial/Airport Approach
- Downtown Revitalization-Historic Preservation Emphasis
- Light Industrial & Airport
- Neighborhood Business
- Future Low Density Residential (Promote Cluster Option; More Intensive Zoning May be Considered in Future Depending upon Road and Sewage Improvements and Possible Use of Transfer of Development Rights)
- Medium Density Residential / Office
- Medium Density Residential
- Medium High Density Residential (with some Neighborhood business allowed)
- Area of Proposed Cooperative Sub-Regional Planning

- D Major Proposed Developments in Annexation Area
- Future Traffic Signals
- State-Designated Agricultural District (Temporary limits on number of new homes eligible for Permanent Preservation)
- Permanently Preserved Lands (Includes State Forests and Land Preserved by Easements)
- Potential New 2 Lane Roads
- Proposed Trails
- 2007 Town Boundaries
- Future Potential Annexation Boundary
- Ditches (approximate locations)
- Conservation Buffer Along Waterways

* Permanently Preserved Lands under Delaware Land-Water Conservation Trust Fund.

0 200 400 Feet

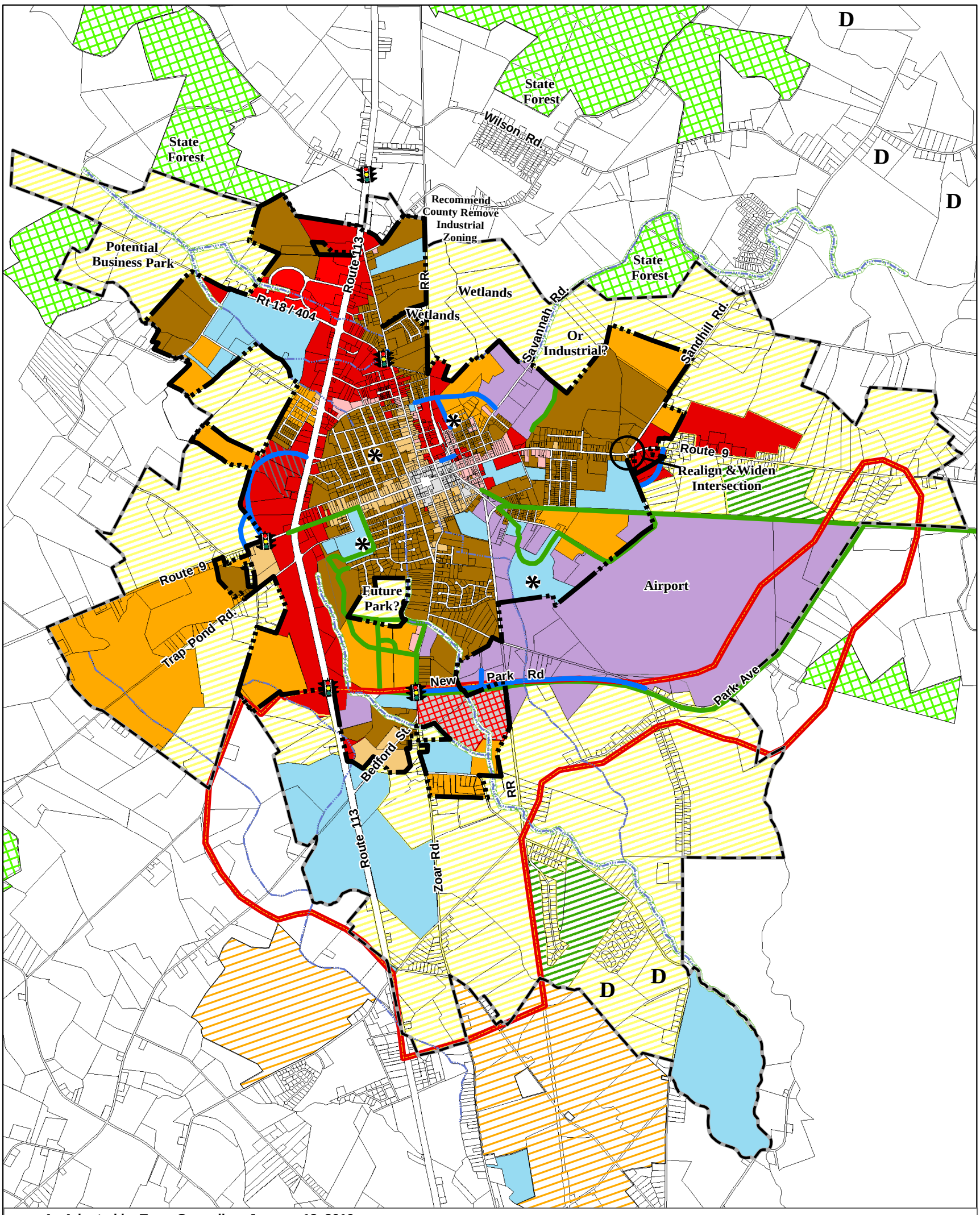

As Adopted by Town Council on January 13, 2010;
Revision Adopted November 13, 2013.
Revision August 28, 2018.

Town of Georgetown Comprehensive Plan

- Education and Community Facilities
- Existing Golf Courses & Private Recreation Site
- Commercial
- Commercial / Medium - High Density Residential
- Limited Commercial/Airport Approach
- Downtown Revitalization-Historic Preservation Emphasis
- Light Industrial & Airport
- Neighborhood Business
- Future Low Density Residential (Promote Cluster Option; More Intensive Zoning May be Considered in Future Depending upon Road and Sewage Improvements and Possible Use of Transfer of Development Rights)
- Medium Density Residential / Office
- Medium Density Residential
- Medium High Density Residential (with some Neighborhood business allowed)
- Area of Proposed Cooperative Sub-Regional Planning

- D Major Proposed Developments in Annexation Area
- Future Traffic Signals
- State-Designated Agricultural District (Temporary limits on number of new homes eligible for Permanent Preservation)
- Permanently Preserved Lands (Includes State Forests and Land Preserved by Easements)
- Potential New 2 Lane Roads
- Proposed Trails
- 2007 Town Boundaries
- Future Potential Annexation Boundary
- Ditches (approximate locations)
- Conservation Buffer Along Waterways

* Permanently Preserved Lands under Delaware Land-Water Conservation Trust Fund.

0 850 1,700 Feet

STATE OF DELAWARE
EXECUTIVE DEPARTMENT
OFFICE OF STATE PLANNING COORDINATION

October 17, 2018

Jocelyn Godwin
Town of Georgetown
37 The Circle
Georgetown, DE 19947

RE: PLUS review 2018-09-06; Georgetown Comprehensive Plan Amendment

Dear Ms. Godwin:

Thank you for meeting with State agency planers on September 26, 2018 to discuss the proposed comprehensive plan amendment for the Town of Georgetown. This amendment will change the future land use map for 1 parcel from commercial to Medium - High density Residential.

Please note that changes to the plan could result in additional comments from the State. Additionally, the comments below reflect only issues that are the responsibility of the agencies that were represented at the meeting.

This office has received the following comments from State agencies:

Office of State Planning Coordination – Contact Dorothy Morris 739-3090

- The Office of State Planning has no objections to the comprehensive plan as written.

Department of Transportation – Contact Bill Brockenbrough 760-2109

- Development of the subject parcel was addressed in a 2007 Traffic Impact Study (TIS) reviewed by DelDOT in 2008 (see attached letter). While DelDOT would recommend against relying on the analysis provided in the 2007 TIS due to its age, the plan amendment now proposed is consistent with the site plan on which the TIS was based.

Department of Natural Resources and Environmental Control – Contact Michael Tholstrup 735-3352

- DNREC has no objection to the proposed amendment to the Georgetown Comprehensive Plan to downzone the subject parcel (Tax Parcel ID #135-14.00-35.00) from Commercial to Medium High Density Residential. However, State wetland maps indicate that portions of the parcel contain palustrine wetlands, as was noted in our 2006 site review

122 Martin Luther King Jr. Blvd. South – Haslet Armory · Third Floor · Dover, DE 19901
Phone (302)739-3090 · Fax (302) 739-5661 · www. stateplanning.delaware.gov

(PLUS #2006-09-10). Wetlands provide water quality benefits, attenuate flooding, and provide important habitat for plants and wildlife. DNREC recommends a 100-foot vegetated buffer from the wetlands to protect habitat and water quality. Applicants should note that disturbances to palustrine wetlands require federal and state authorizations. According to the Sussex County parcel map, the southeast corner of the subject parcel is borders the Georgetown-Vaughn ditch, a headwater tributary that ultimately discharges to the Deep Creek and the Nanticoke River watersheds. Applicants should avoid placing permanent structures within the ditch right-of-way in order to allow for maintenance access.

Maintaining natural resource protections and conservation measures will improve long term regional sustainability and protect the overall health of the community. The Department has resources and expertise that are available to help support the Town's efforts.

Once a decision has been reached on this proposed comprehensive plan amendment, please forward a copy of the plan amendment with the adopting ordinance to the Office of State Planning Coordination for our records. The plan amendment must include a revised version of any maps that were updated as well as any text that was approved in amending the comprehensive plan.

Thank you for the opportunity to review this Comprehensive Plan amendment. If you have any questions, please contact me at 302-739-3090.

Sincerely,

Constance C. Holland, AICP
Director, Office of State Planning Coordination

MORRIS & RITCHIE ASSOCIATES, INC.

ENGINEERS, ARCHITECTS, PLANNERS, SURVEYORS,
AND LANDSCAPE ARCHITECTS

October 16, 2018

Town of Georgetown
37 The Circle
Georgetown, DE 19947

ATTN: Mayor Bill West

RE: Comprehensive Plan Future Land Use Map Amendment
Tax Parcels Numbers 135-19.00-64.00 & 135-19.00-65.00

Dear: Mayor and Council:

On behalf of our client, Mocci Industries LLC, we hereby request that the Medium Density Residential area as shown on the Town's Comprehensive Plan Future Land Use map for Tax Parcels 135-19.00-64.00 and 135-19.00-65.00 be amended to Medium High Density Residential to allow for MR1 (Multifamily Residential) zoning per the Town's Code.

We also request that the limits of the Commercial area as shown on the Town's Comprehensive Plan Future Land Use map for Tax Parcels 135-19.00-64.00 and 135-19.00-65.00 be amended as shown on exhibit "A" attached to this letter.

The conceptual site plan was developed after Morris & Ritchie Associates, Inc. (MRA) completed a boundary survey of the two parcels and a location survey of potential non-tidal wetlands as delineated by Geo-Technology Associates, Inc. (GTA).

These parcels are located along the westerly portion of South DuPont Boulevard (U.S. Rt 113) near the intersection of Arrow Safety Road.

Should you require additional information regarding this Future Land Use Map amendment request please call (302) 242-1680 or email ptolliver@mragta.com.

PHILLIP LEE TOLLIVER
REGISTERED
No. 12489
DELAWARE
PROFESSIONAL ENGINEER

Very Truly Yours,
MORRIS & RITCHIE ASSOCIATES, INC.

Phillip L. Tolliver, P.E.
Principal

Enclosures
CC: Mr. Ralph Mocci

8 W. Market St Georgetown, DE 19947 (302) 855-5734 Fax: (302) 855-0157 www.mragta.com

Abingdon, MD (410) 515-9000 ✦ Baltimore, MD (410) 935-5050 ✦ Laurel, MD (410) 792-9792 ✦ Towson, MD (410) 821-1690 ✦ Georgetown, DE (302) 855-5734 ✦ New Castle, DE (302) 326-2200 ✦ Sterling, VA (703) 674-0161 ✦ Raleigh, NC (984) 200-2103

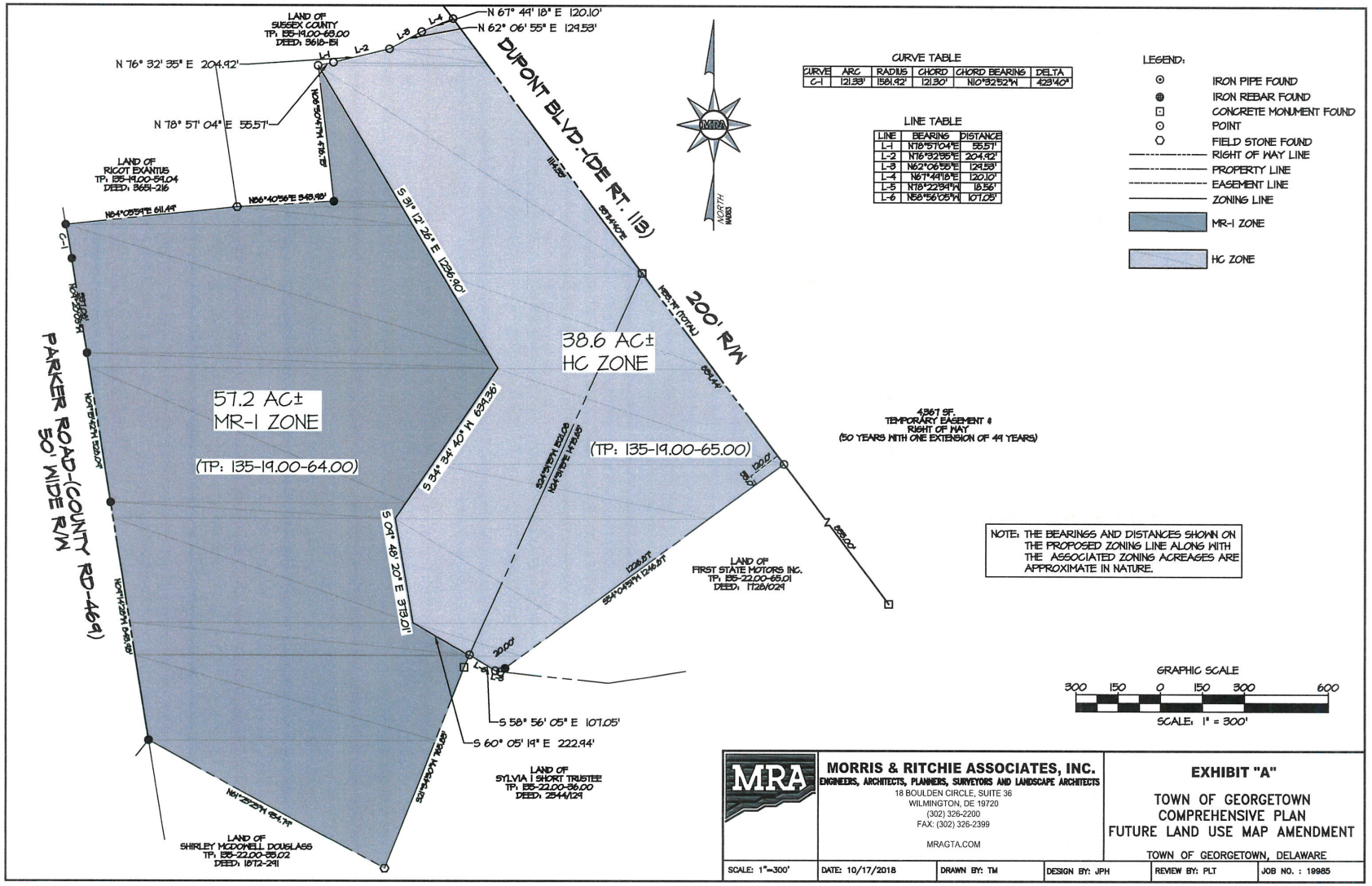
LAND OF SUSSEX COUNTY TP: 135-19.00-68.00 DEED: 3610-151
N 67° 44' 18" E 120.10'
N 62° 06' 55" E 129.53'
N 76° 32' 35" E 204.92'
N 78° 57' 04" E 55.57'
LAND OF RICOTT EXANTIUS TP: 135-19.00-59.04 DEED: 3651-216
DUPONT BLVD.-(DE RT. 113)
200' R/W
38.6 AC± HC ZONE
(TP: 135-19.00-65.00)
57.2 AC± MR-1 ZONE
(TP: 135-19.00-64.00)
PARKER ROAD-(COUNTY RD-469)
50' WIDE R/W
S 31° 12' 26" E 1236.90'
S 34° 34' 40" W 634.36'
S 04° 48' 20" E 313.01'
S 58° 56' 05" E 107.05'
S 60° 05' 19" E 222.94'
LAND OF FIRST STATE MOTORS INC. TP: 135-22.00-65.01 DEED: 1728/029
LAND OF SYLVIA I SHORT TRUSTEE TP: 135-22.00-36.00 DEED: 2544/129
LAND OF SHIRLEY MCDONELL DOUGLASS TP: 135-22.00-35.02 DEED: 1872-241
4,367 SF. TEMPORARY EASEMENT & RIGHT OF WAY (50 YEARS WITH ONE EXTENSION OF 49 YEARS)
NORTH
CURVE TABLE
CURVE | ARC | RADIUS | CHORD | CHORD BEARING | DELTA
C-1 | 121.33' | 1581.42' | 121.30' | N10°32'52"W | 4°39'40"
LINE TABLE
LINE | BEARING | DISTANCE
L-1 | N78°57'04"E | 55.57'
L-2 | N76°32'35"E | 204.92'
L-3 | N62°06'55"E | 129.53'
L-4 | N67°44'18"E | 120.10'
L-5 | N78°22'34"W | 18.56'
L-6 | N58°56'05"W | 107.05'
LEGEND:
IRON PIPE FOUND
IRON REBAR FOUND
CONCRETE MONUMENT FOUND
POINT
FIELD STONE FOUND
RIGHT OF WAY LINE
PROPERTY LINE
EASEMENT LINE
ZONING LINE
MR-1 ZONE
HC ZONE
NOTE: THE BEARINGS AND DISTANCES SHOWN ON THE PROPOSED ZONING LINE ALONG WITH THE ASSOCIATED ZONING ACREAGES ARE APPROXIMATE IN NATURE.
GRAPHIC SCALE
300 150 0 150 300 600
SCALE: 1" = 300'
MORRIS & RITCHIE ASSOCIATES, INC.
ENGINEERS, ARCHITECTS, PLANNERS, SURVEYORS AND LANDSCAPE ARCHITECTS
18 BOULDEN CIRCLE, SUITE 36
WILMINGTON, DE 19720
(302) 326-2200
FAX: (302) 326-2399
MRAGTA.COM
EXHIBIT "A"
TOWN OF GEORGETOWN
COMPREHENSIVE PLAN
FUTURE LAND USE MAP AMENDMENT
TOWN OF GEORGETOWN, DELAWARE
SCALE: 1"=300'
DATE: 10/17/2018
DRAWN BY: TM
DESIGN BY: JPH
REVIEW BY: PLT
JOB NO. : 19985

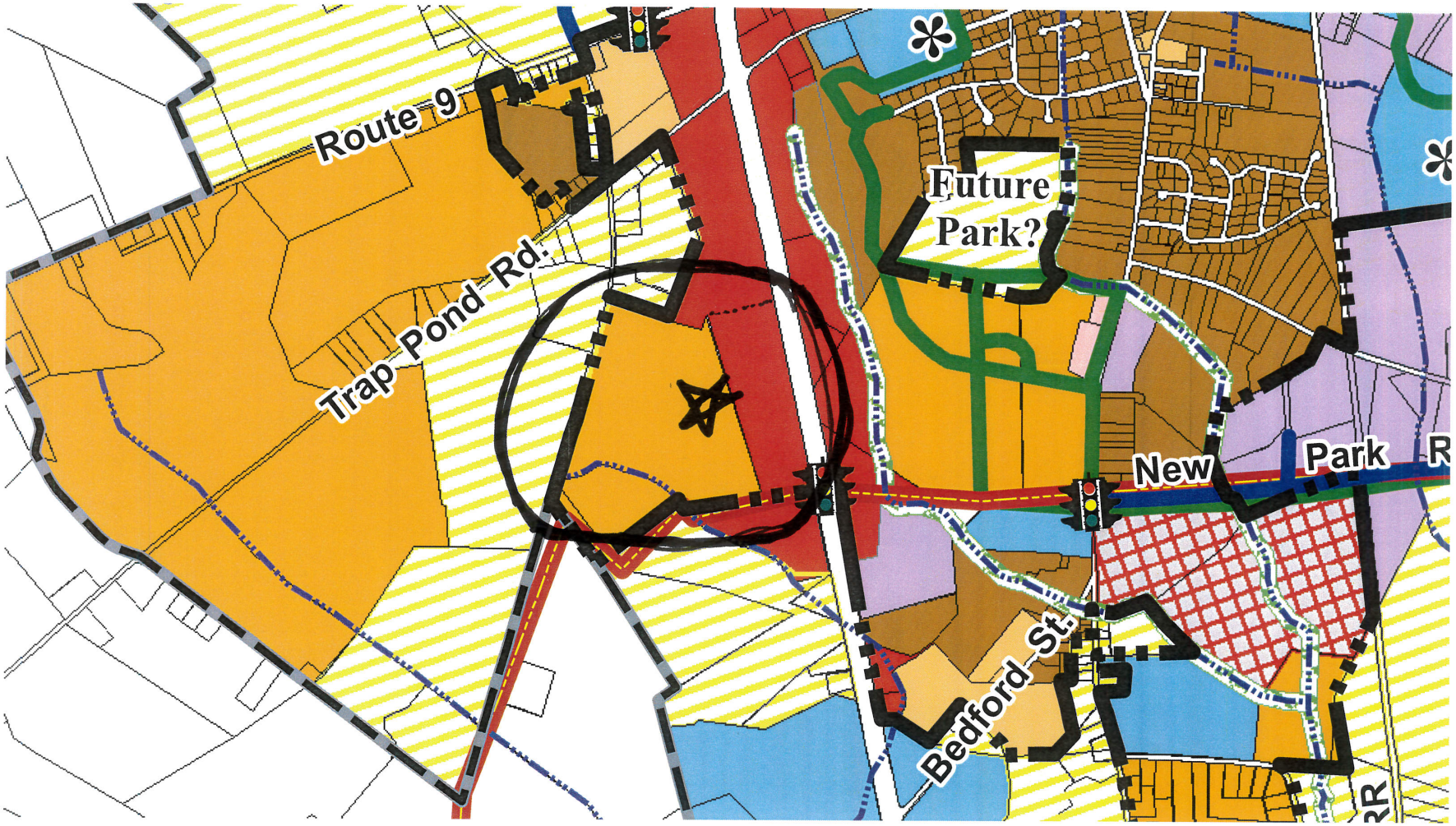

CURRENT COMP PLAN MAP

TOWN MANAGER REPORT
November 14, 2018

Pedestrian Crossing – West Market Street at Margaret Street/Sussex Central Drive

The Town has been advised DelDOT has received federal approval for the proposed pedestrian crossing improvements along West Market Street at Margaret Street/Sussex Central Drive. Work is anticipated to be scheduled for April 19 – 28, 2019. It has been determined the vehicular signal pole ("mast arm") is too long for a fluted pole design; however, it can be black powder-coated at no cost. The five (5) pedestrian signal poles can be of a decorative nature, fluted design. This option would require the Town to reimburse DelDOT $11,924.35.

Pleasure of the Mayor and Council

FOP Officers

The Town has received official notice from the Fraternal Order of Police that the new elected executive board members for the Georgetown Police Department Bargaining Unit and they are as follows:

- President: Edgar Verde
- Vice President: Michael Goines
- Treasurer: Richard Arnold

Project Updates

- 39 The Circle – Roof work has been initiated – once completed and a dry interior can be ensured, interior work will commence. This includes electrical, drywall, interior finishes
- Planting Islands – After removal of the yucca plants, DelDOT has finally approved our alternate plant selections for the intersection. Hopefully the weather will cooperate
- South Race Street – We anticipate sidewalk ADA ramps to begin within the next two weeks to be followed by pavement rehabilitation (both are weather dependent)
- DTCC Entrance & Parking Lot – The Town received notice this will no longer be a CTF Project, thus the Town will no longer serve as the flow through agency

Miscellaneous

- Special Thanks to all Town Employees for their efforts for Return Day – the Town looked great and many positive complements have been received
- Upcoming Events:
  - **Town Offices Closed:** Thursday, November 22, in observation of Thanksgiving Day
  - **Town Offices Closed:** Friday, November 23, in observation of the Day after Thanksgiving
  - **Sussex County Association of Towns:** Wednesday, December 5, hosted by the City of Rehoboth Beach

TOWN MANAGER REPORT
November 14, 2018

- **Sussex County Association of Towns Steering Committee:** Friday, December 7, at Arena's at the Airport

Town Council Meeting
November 14, 2018

1) Flows

Influent Flow January – October 2018

269.78 mg

Total rain fall recorded at the plant for the year

47.04"

Gallons Sprayed Town's field

74.16 mg

Gallons Sprayed Baxter's fields

81.17 mg

Gallons Sprayed on Pettyjohn Woodlands

145.44 mg

Lagoon Depths – 75mg, 10.5 **ft.** 15mg, 4.0 **ft.**

2) The wastewater staff worked with Beacon Engineering, Aztech construction, and ICS to repair damage to the liner, and slope under the liner, where the water enters the storage pond.

3) We are working with Beacon Engineering to get a price, to repair the Stevenson lane pump station effluent force main.

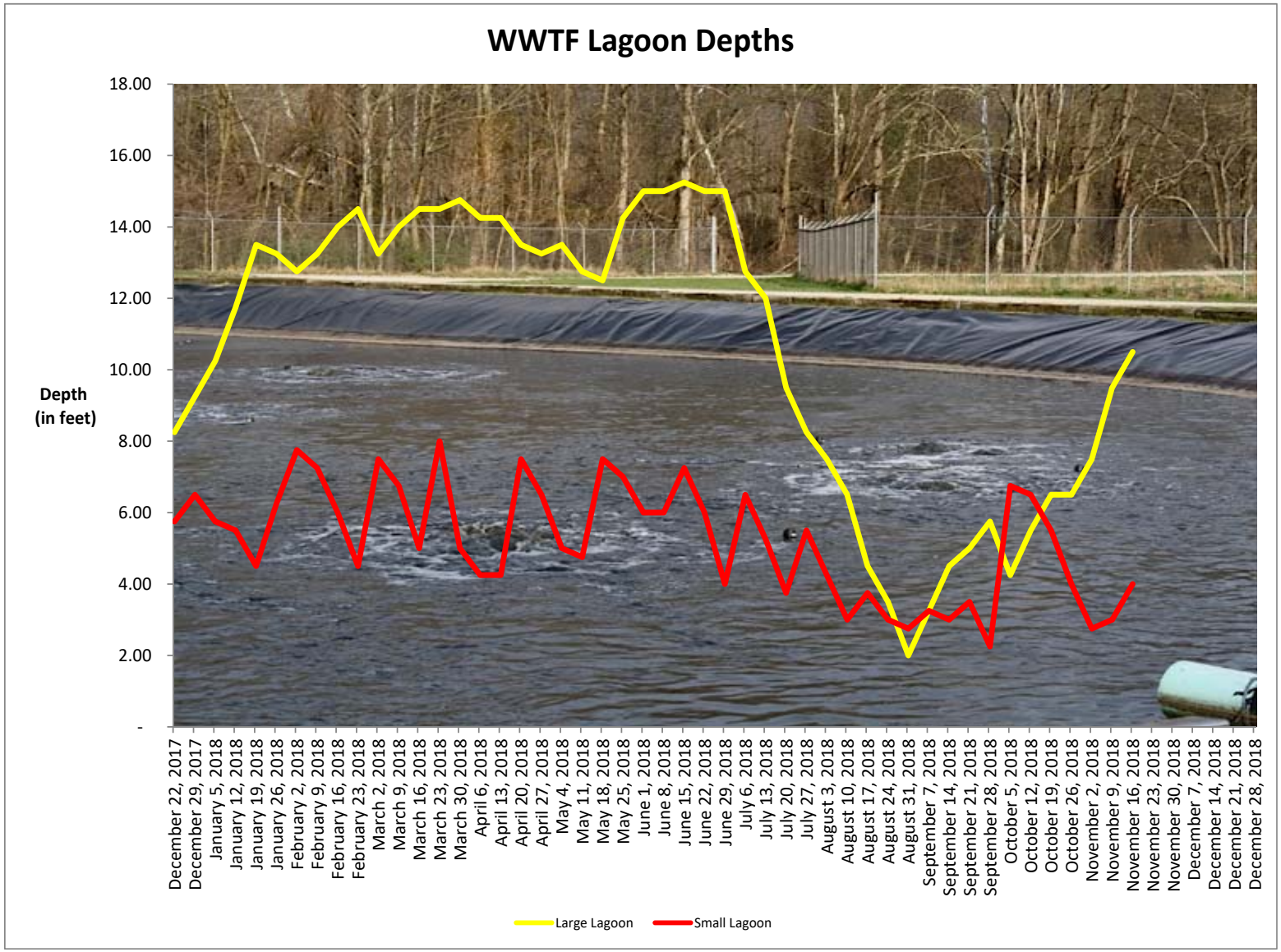
WWTF Lagoon Depths
Depth (in feet)
18.00
16.00
14.00
12.00
10.00
8.00
6.00
4.00
2.00
-
December 22, 2017
December 29, 2017
January 5, 2018
January 12, 2018
January 19, 2018
January 26, 2018
February 2, 2018
February 9, 2018
February 16, 2018
February 23, 2018
March 2, 2018
March 9, 2018
March 16, 2018
March 23, 2018
March 30, 2018
April 6, 2018
April 13, 2018
April 20, 2018
April 27, 2018
May 4, 2018
May 11, 2018
May 18, 2018
May 25, 2018
June 1, 2018
June 8, 2018
June 15, 2018
June 22, 2018
June 29, 2018
July 6, 2018
July 13, 2018
July 20, 2018
July 27, 2018
August 3, 2018
August 10, 2018
August 17, 2018
August 24, 2018
August 31, 2018
September 7, 2018
September 14, 2018
September 21, 2018
September 28, 2018
October 5, 2018
October 12, 2018
October 19, 2018
October 26, 2018
November 2, 2018
November 9, 2018
November 16, 2018
November 23, 2018
November 30, 2018
December 7, 2018
December 14, 2018
December 21, 2018
December 28, 2018
Large Lagoon
Small Lagoon